EASYLIFE

# ALEZIO S
# & ALEZIO S V200



## AIR/WATER **HEAT PUMP**



De Dietrich
Sustainable Comfort®

www.dedietrich-heating.com

## NEW INVERTER HEAT PUMP
THE ESSENTIALS ARE IN THE AIR




**Save up to**

**70%***

**on your energy bill**

**Coefficient of**

**performance**

**COP up to 5,11**

**Heating in winter, cooling in summer**

*Compared to a conventional technology boiler more than 20 years old without regulation and without programming.



## ALEZIO S

### YOUR COMFORT
FIRST

- **Comfort in all seasons** with heating in winter and cooling in summer.
- Equipped with the **INVERTER system**, the Alezio S heat pump offers greater stability of the set temperature.
- **Respects the environment** with 100% clean and renewable energy consumption.
- Compatible with swimming-pool heating.
- **Solution that can easily adapts to all projects and budgets.**

### SAVINGS, PERFORMANCE
FOR YOUR RENOVATION PROJECTS

- Inverter system which adapts power to need, saving **30% compared** to a conventional heat pump.
- **Up to 70% savings** on energy bills compared to an all-electric heating solution.
- **Coefficient of performance** COP up to 5.1 .
- **Reduced dimensions** for quick and easy installation.
- **High-level performance, eco-design compliant.**





## ALEZIO S V200

### COMPACT SIZE
MAXIMUM DOMESTIC HOT WATER COMFORT

- With a 180L tank integrated in the indoor module, you get **the best domestic hot water performance**.
- Control your heating in **2 different zones** and **independently**.
- With **Reversible technology**, for underfloor heating/cooling, air-conditioning can be provided by fancoils, using the "Insulation Kit" option.
- The Alezio S V200 offers **outstanding compactness** with a height of only 1.30m. This heat pump will be easily integrated under a staircase or in the basement.

# NEW INTERFACE
## CONNECTED AND INTUITIVE

E-PILOT

**THE E-PILOT CONTROL PANEL**
ON YOUR HEAT PUMP

- New interface
- Simplified access to all operating modes
- Intuitive selection menu
- Features that make your life easier:
  - Childprotection
  - Holiday function
  - Anomaly alerts directly visible on the home screen
  - Time programming to fit your lifestyle
  - Prioritisation of heating or domestic hot water
- Quick and easy changeover from heating to cooling mode: one click is all it takes to switch from heating mode to cooling mode
- Blue backlight display for better readability with pictograms and clear text



NEW

New Bluetooth function with a commissioning wizzard, ensuring the correct settings of your installation done by your professional



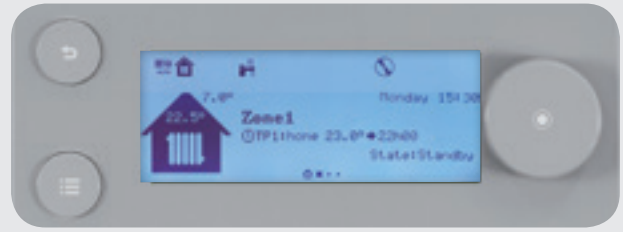

## **COMPATIBLE** WITH SMART TC° CONTROL

**FOR MORE COMFORT AND SAVINGS**

SMART TC° alexa IFTTT

Thanks to its associated application you will be able to access the following functionalities:

- **Remote management** of heating, domestic hot water and cooling,
- **Intuitive handling**,
- **Programming management according** to your needs,
- Precise temperature **control**,
- **Quick setup:** user help, advanced options,
- **Maintenance of your installation made easy** thanks to remote, secured, on-demand access, by your installer,
- **Malfunction alert** directly to your smartphone.




Google Play App Store

# EFFICIENCY IN YOUR PROJECTS
OF RENOVATION



## OUR HEAT PUMPS
TO LISTEN TO YOUR NEEDS

- Consumption of **clean and renewable energy**; low carbon impact.
- **Very low noise level** with only 39 dB(A) for the Alezio 4.5 MR outdoor module.
- Possibility to control your heating in **2 different zones** and **independently**.
- **Attentive to your needs**, they adapt the heating to within half a degree thanks to the connected room thermostat and the outdoor temperature sensor.

## THE COMPACT RANGE
THAT INTEGRATES EASILY
INTO YOUR HOME

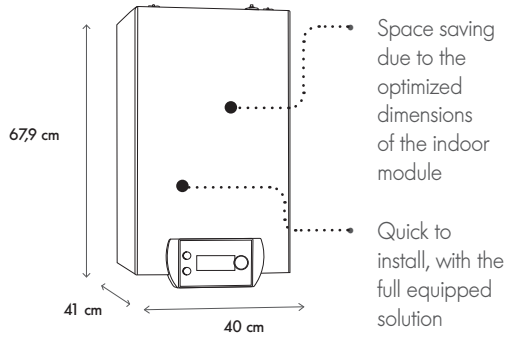


**Indoor module Alezio S**

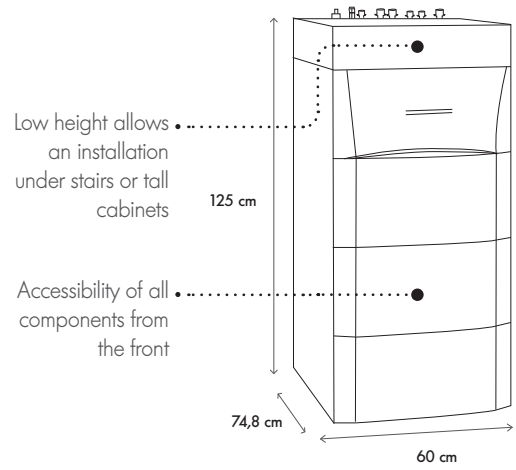


**Indoor module Alezio S V200**

## MODELS

Heating only

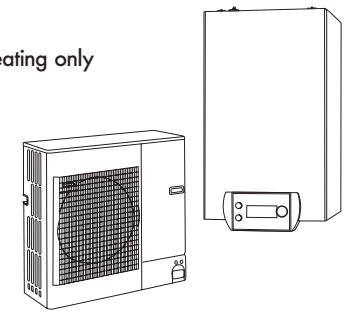

**Alezio S**

Heating + Domestic Hot Water

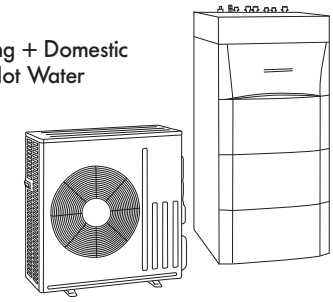

**Alezio S V200**

# YOUR HEATING PROJECT

## DECIDE WHAT YOU NEED


H 88 cm
L 84 cm
P 36 cm
63 kg


H 63 cm
L 80,9 cm
P 36 cm
47 kg


H 94,3 cm
L 95 cm
P 37 cm
82 kg


H 135 cm
L 95 cm
P 37 cm
123 à 138 kg

| | | ALEZIO 4,5 MR Air/Water | ALEZIO 6 MR Air/Water | ALEZIO 8 MR Air/Water | ALEZIO 11 TR/MR Air/Water | ALEZIO 16 TR/MR Air/Water |
|---|---|---|---|---|---|---|
| **SEASONAL PERFORMANCE ALEZIO S AND ALEZIO S V200** | | | | | | |
| Energy efficiency class (SEE) (heating) (35°C)(Alezio S) | | A+++ | A+++ | A+++ | A+++ | A+++ |
| Energy efficiency class (SEE) (heating) (55°C)(Alezio S) | | A++ | A++ | A++ | A++ | A+ |
| Energy efficiency class (SEE) (heating) (35°C)(Alezio S V200) | | A+++ / A+ | A+++ / A | A+++ / A | A+++ / A | A+++ / A |
| Energy efficiency class (SEE) (heating) (55°C)(Alezio S V200) | | A++ / A+ | A++ / A | A++ / A | A++ / A | A+ / A |
| Seasonal space heating energy efficiency under average temperature (35°C/55°C) * | % | **189/134** | **176/138** | **178/129** | **178/125** | **175/121** |
| Seasonal space heating energy efficiency under average temperature (35°C/55°C) (with outdoor sensor supplied as standard) | % | **191/136** | **178/139** | **180/131** | **180/127** | **175/123** |
| DHW seasonal energy efficiency (cycle L)(Alezio S V200) | % | **106/121 (M/L)** | **114** | **114** | **114** | **114** |
| **CERTIFIED THERMAL PERFORMANCE ALEZIO S ET ALEZIO S V200** | | | | | | |
| Heat output at +7°C/+35°C (1) | kW | **4,6** | **5,82** | **7,9** | **11,39** | **14,65** |
| Heating COP at +7°C/+35°C (1) | | **5,11** | **4,22** | **4,34** | **4,65** | **4,22** |
| Indoor / Outdoor module perceived sound level (2) (Alezio S) | dB[A] | **39/45** | **42/40** | **43/45** | **47/45** | **46/45** |
| Indoor / Outdoor module perceived sound level (2) (Alezio S V200) | dB[A] | **39/41** | **43/41** | **45/41** | **47/40** | **48/40** |
| CO2 equivalent | tonne | **2,71** | **4,38** | **6,68** | **9,6** | **9,6** |
| Refrigerant fluid R410A | kg | **1,3** | **2,1** | **3,2** | **4,6** | **4,6** |
| Length min - max ** | m | **2-30** | **2-40** | **2-40** | **2-75** | **2-75** |
| **ONLY ALEZIO S V200** | | | | | | |
| DHW tank capacity | litre | **180** | **180** | **180** | **180** | **180** |
| Max. usable hot water volume (Vmax) (3) | litre | **243** | **254** | **251** | **231** | **231** |
| COP_DWH (Domestic Hot Water) (M/L draw-off cycle) (3) | | **2,5/2,9** | **-/2,72** | **-/2,72** | **-/2,72** | **-/2,72** |
| **CERTIFIED THERMAL PERFORMANCE ALEZIO S ET ALEZIO S V200** | | | | | | |
| Available with adittional electrical element or boiler backup | | ● | ● | ● | ● | ● |
| Cooling / air-conditioning | | ● | ● | ● | ● | ● |
| Alezio S: Domestic hot water production with independent BL type water heater, 150 to 300L (electric or electric-solar water heater) | | ● | ● | ● | ● | ● |
| Alezio S V200: Domestic hot water production with built-in 180L water heater | | ● | ● | ● | ● | ● |

*Values certified according directives n°813/2013
**Max height difference 30 m for all models
(1) Heating mode: outside air temperature/water temperature at outlet, performance in accordance with EN 14511-2
(2) At 1 m in a free field (5 m for the outdoor unit) (3) Draw-off cycle M in accordance with EN 16147

### A FRENCH QUALITY MARK

SINCE **1684**

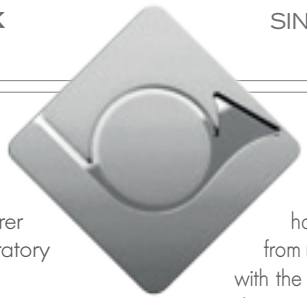

100% French manufacturing of heat pump indoor modules. The international heat pump R&D centre is based in Mertzwiller, France. Since 2015, De Dietrich has had the 1st manufacturer COFRAC-accredited thermal and acoustic laboratory in Europe.

For 3 centuries, De Dietrich has based its success on real values: quality, reliability, sustainability. For the sake of the environment, and your comfort, De Dietrich has incorporated fully all the renewable energies available from multiple, planet-protecting sources. So heating appliances with the De Dietrich brand are at the cutting edge of innovation, made to exceptional standards of quality and durability through the involvement of the whole workforce since more than 300 years.

Your installer


De Dietrich
BDR THERMEA France
S.A.S. with corporate capital of 229 288 696 €
57, rue de la Gare - 67580 Mertzwiller
tél. 03 88 80 27 00 - Fax 03 88 80 27 99
www.dedietrich-heating.com


BDR THERMEA GROUP


PEFC 10-31-1620 / PEFC certified / This product is from sustainably-managed forests and controlled sources / pefc-france.org
Printed with vegetable-based inks as part of our commitment to the environment.
IMPRIM'VERT®
Réf. 300035457 - 05/2020 Non-contractual photos. Photographs Gris-Line Studio – Pascal Spaeth