ALEZIO S / S V200

REVERSIBLE AIR-TO-WATER "SPLIT INVERTER" HEAT PUMPS



ALEZIO S R32



ALEZIO S R410A



ALEZIO S V200 R32

- **Alezio S/E**
  with electrical backup via integrated immersion heater
- **Alezio S/H**
  with (or without) hydraulic backup via boiler
- **Alezio S/E V 200**
  with integrated 180-litre DHW tank and electrical backup via immersion heater
- **Alezio S/H V200**
  with integrated 180-litre DHW tank with (or without) hydraulic backup via boiler

R32 from 4.6 to 7.6 kW
R410A from 11.39 to 14.6 kW

Heating with radiators
Heating and refreshing with underfloor

Heating and cooling with fancoils
Domestic hot water production with integrated tank (SV 200 models)

Air-to-water heat pump

Renewable energy

Electricity
(power supplied to the compressor)

Compatible room thermostat
SMART TC°

Diematic Evolution regulation

OPERATING CONDITIONS

operating temperature limits

heating mode
Outside air: - 20/+ 35°C
Water: + 18/+ 60°C

"cooling" mode
Outside air: +7/+ 46°C
Water: + 18/+ 25°C

air conditionning mode
Outside air: + 7/+ 46°C
Water: + 7/+ 25°C

heating circuit

Max. operating pressure: 3 bar
Max. operating temp.: 95°C with (.../H) and 75°C with (.../E)

DHW circuit (ALEZIO S V200)

Max. operating pressure: 10 bar
Max. operating temp.: 65°C

ALEZIO S and ALEZIO SV 200 heat pumps stand out for their high performance: COP from 4.22 to 5.20 at an outside temperature of + 7°C (EER from 2.89 to 3.6 at an outside temperature of + 35°C). A high-tech product equipped with an INVERTER system.

ALEZIO S heat pumps offer greater stability in the temperature setpoint, a significant reduction in energy consumption and quiet operation. ALEZIO S heat pumps offer complete comfort all year round thanks to their reversible design and their capacity for cooling (underfloor cooling type, water at + 18°C), or air conditionning using fan coil units (water at + 7°C) for Alezio S and Alezio S V200 models. These heat pumps are suitable for integration in new builds and renovation projects alike thanks to their compact construction, advanced design and ease of installation.

ALEZIO S V200 models are also used for domestic hot water production. As standard, ALEZIO S V200 models have a built-in DHW tank with a 180-litre capacity in the indoor module, forming a beautifully designed uniform column.

CE

certified performances available on:
keymark.eu/en/certificates/certificates-data-base

De Dietrich

PRESENTATION

ALEZIO S / SV 200 heat pumps comprise an outdoor module AWHP/AWHPR and a MIV-S wall-mounted indoor module or a MIV-S V200 floor standing module fitted with a 180 liter domestic hot water tank.

AWHP OUTDOOR MODULE TECHNICAL DATA

The AWHP and AWHPR outdoor modules are used in our current split air-to-water ranges.
The outdoor module comprises:
- AWHPR 4, 6 and 8 are using R32 refrigerant
- AWHP 11 and 16 are using R410 A refrigerant
- a modulating compressor, an aluminium fin heat exchanger
- 1 to 2 axial fan(s) (depending on the model air)
- a 4-way reversal valve
- a high pressure switch and a expansion valve.

MIV-S HYDRAULIC INDOOR MODULE TECHNICAL DATA

MIV-S/H... hydraulic indoor module with hydraulic backup via boiler or **MIV-S/E...** with electrical backup via immersion heater 3 or 6-kW single-phase connection, or 6- or 9-kW three-phase connection (installation requires heat pump).

MAIN FEATURES

- Diematic Evolution control panel, with control according to outside temperature, and factory-set to control one DHW production circuit and one direct circuit for heating or cooling/air conditionning (outdoor sensor included),
- A sludge trap with magnetic filter for MIV-S R32,
- Condenser comprising a stainless steel plate heat exchanger, low-loss header, heating pump with Energy Efficiency Index (EEI) < 0.23, 8-litre expansion vessel, mechanical manometer, safety valve, automatic air vent, flowmeter,
- Suitable for renovation projects or new builds
- High performance with COP of up to 5.20 and EER of up to 3.6.
- Easy access to the various components
- The module can be remote-controlled thanks to the WiFi SMART TC° thermostat
- Compatible with De Dietrich START App commissioning wizard.

MIV-S V200 HYDRAULIC INDOOR MODULE TECHNICAL DATA WITH INTEGRATED 180 LITER DHW TANK

MIV-S V200 hydraulic indoor module available in 2 versions:
- **MIV-S V200/E**: electrical backup via integrated immersion heater, 3 or 6 kW single-phase connection, or 6- or 9-kW three-phase connection (installation requires heat pump
- **MIV-S V200/H**: for hydraulic backup via boiler.

MAIN FEATURES

- Module with a compact column configuration enabling DHW production thanks to a built-in glasslined tank with a 180-litre capacity. The steel DHW tank incorporates a magnesium anode and the inside of the tank is coated with enamel to protect it from corrosion. The DHW tank is insulated with CFC-free polyurethane foam to minimise heat loss.
- Diematic Evolution control panel with control according to the outside temperature, and which can control one DHW circuit and one direct circuit for heating or cooling/refreshing (outdoor sensor included),
- Condenser comprising a stainless steel plate heat exchanger,
- A sludge trap with magnetic filter for MIV-S V200 R32, low-loss header,
- Heating pump with energy efficiency index (EEI) < 0.23,
- 8-litre expansion vessel, electronic manometer, safety valve, automatic air vent, flowmeter.
- Suitable for renovation projects or new builds
- High performance with COP of up to 5.20 and EER of up to 3.6
- Easy access to the various components
- The module can be remote-controlled thanks to the WiFi SMART TC° thermostat
- Compatible with De Dietrich START App commissioning wizard.

ENERGY LABELLING

Each tank is delivered with an energy label displaying a range of information, including energy efficiency, annual energy consumption, manufacturer name and noise level. Visit our site "ecosolutions.dedietrich-heating.com"

Example of a label:

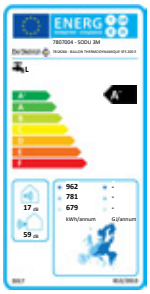

Access to the tool:

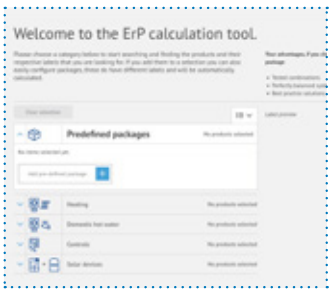

MODELS

ALEZIO S MODELS

RADIATOR HEATING OR HEATING AND COOLING WITH UNDERFLOOR HEATING/COOLING BACKUP VIA INTEGRATED IMMERSION HEATER

	MODELS	REFRIGERANT	REFERENCE	INDOOR UNIT		OUTDOOR UNIT		OUTPUT	
				 MIV-S 4-8/EM	 MIV-S 11-16/EM OR MIV-S 11-16/ET	 AWHPR 4/6/8 MR	 AWHP 11/16 MR/TR	HEATING KW (1)	COOLING KW (2)
EASYLIFE A++ 	Alezio S R32 4 MR/EM	R32	**7792409**	7772830	-	7736361	-	4.6	6.0
	Alezio S R32 6 MR/EM	R32	**7792410**	7772830	-	7736362	-	6.4	7.0
	Alezio S R32 8 MR/EM	R32	**7792411**	7772830	-	7736363	-	7.6	7.1
A++ 	ALezio S11 MR/EM	R410A	**7694544**	-	7683572	-	7609927	11.39	11.16
	Alezio S11 TR/E	R410A	**7694546**	-	7683573	-	7609928	11.39	11.16
	Alezio S16 MR/EM	R410A	**7694548**	-	7683572	-	7609929	14.65	14.46
	Alezio S 16 TR/E	R410A	**7694550**	-	7683573	-	7609930	14.65	14.46

(1) Water flow temp.: + 35°C, outside temp.: + 7°C. (2) Water flow temp.: + 18 °C, outside temp.: + 35 °C

RADIATOR HEATING OR HEATING AND COOLING WITH UNDERFLOOR HEATING/COOLING WITH (OR WITHOUT) HYDRAULIC BACKUP VIA BOILER

	MODELS	REFRIGERANT	REFERENCE	INDOOR UNIT		OUTDOOR UNIT		OUTPUT	
				 MIV-S 4-8/H	 MIV-S 11-16/H	 AWHPR 4/6/8 MR	 AWHP 11/16 MR/TR	HEATING KW (1)	COOLING KW (2)
EASYLIFE A++ 	Alezio S R32 4 MR/H	R32	**7792412**	7791248	-	7736361	-	4.6	6.0
	Alezio S R32 6 MR/H	R32	**7792413**	7791248	-	7736362	-	6.4	7.0
	Alezio S R32 8 MR/H	R32	**7792414**	7791248	-	7736363	-	7.6	7.1
A++ 	ALezio S11 MR/H	R410A	**7694543**	-	7683575	-	7609927	11.39	11.16
	Alezio S11 TR/H	R410A	**7694545**	-	7683575	-	7609928	11.39	11.16
	Alezio S16 MR/H	R410A	**7654547**	-	7683575	-	7609929	14.65	14.46
	Alezio S 16 TR/H	R410A	**7694549**	-	7683575	-	7609930	14.65	14.46

(1) Water flow temp.: + 35°C, outside temp.: + 7°C. (2) Water flow temp.: + 18 °C, outside temp.: + 35 °C

MODELS

ALEZIO S V200 MODELS

RADIATOR HEATING OR HEATING AND COOLING WITH UNDERFLOOR HEATING/COOLING BACKUP VIA INTEGRATED IMMERSION HEATER

	MODELS	REFRIGERANT	REFERENCE	INDOOR UNIT	OUTDOOR UNIT		OUTPUT	
							HEATING KW (1)	COOLING KW (2)
EASYLIFE				MIV-S/MIV-4S	AWHPR 4/6/8 MR	AWHP 11/16 MR/TR		
A++	Alezio S V200 R32 4 MR/EM	R32	**7790396**	7788124	7736361	-	4.6	6.0
A	Alezio S V200 R32 6 MR/EM	R32	**7790400**	7788124	7736362	-	6.4	7.0
	Alezio S V200 R32 8 MR/EM	R32	**7790402**	7788124	7736363	-	7.6	7.1
	ALezio S11 MR/EM V200	R410A	**7694530**	7682609	-	7609927	11.39	11.16
	Alezio S11 TR/E V200	R410A	**7694532**	7682609	-	7609928	11.39	11.16
	Alezio S16 MR/EM V200	R410A	**7694534**	7682609	-	7609929	14.65	14.47
	Alezio S 16 TR/ E V200 E	R410A	**7694536**	7682609	-	7609930	14.65	14.47

(1) Water flow temp.: + 35°C, outside temp.: + 7°C.
(2) Water flow temp.: + 18°C, outside temp.: + 35°C

RADIATOR HEATING OR HEATING AND COOLING WITH UNDERFLOOR HEATING/COOLING WITH (OR WITHOUT) HYDRAULIC BACKUP VIA BOILER

	MODELS	REFRIGERANT	REFERENCE	INDOOR UNIT	OUTDOOR UNIT		OUTPUT	
							HEATING KW (1)	COOLING KW (2)
EASYLIFE				MIV-S/MIV-4S	AWHPR 4/6/8 MR	AWHP 11/16 MR/TR		
A++	Alezio S V200 R32 4 MR/H	R32	**7790394**	7788125	7736361	-	4.6	6.0
A	Alezio S V200 R32 6 MR/H	R32	**7790398**	7788125	7736362	-	6.4	7.0
	Alezio S V200 R32 8 MR/H	R32	**7790401**	7788125	7736363	-	7.6	7.1
	ALezio S11 MR/H V200	R410A	**7694529**	7682610	-	7609927	11.39	11.16
	Alezio S11 TR/H V200	R410A	**7694531**	7682610	-	7609928	11.39	11.16
	Alezio S16 MR/H V200	R410A	**7694533**	7682610	-	7609929	14.65	14.47
	Alezio S 16 TR/H V200	R410A	**7792421**	7682610	-	7609930	14.65	14.46

(1) Water flow temp.: + 35°C, outside temp.: + 7°C.
(2) Water flow temp.: + 18°C, outside temp.: + 35°C

TECHNICAL SPECIFICATIONS

ALEZIO S/E (ELECTRICAL BACK UP)

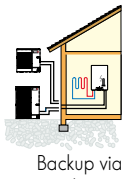

Backup via immersion heater

MIV-S/E INDOOR MODULE SPECIFICATIONS

MAIN DIMENSIONS (mm AND INCHES)

MIV-S /EM (R32 / 4, 6 & 8 KW)

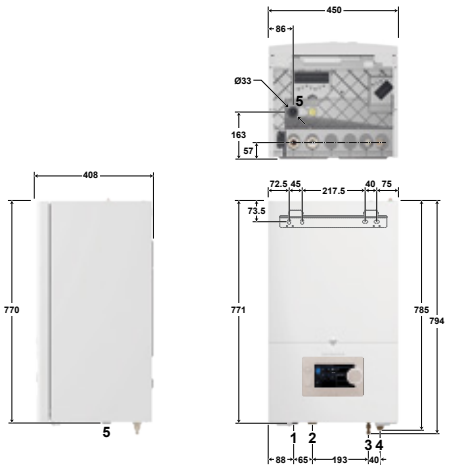

ALEZIOS_S_R32_F5000

MIV-S/EM AND MIV-S/ET (R 410A /11 & 16 KW)

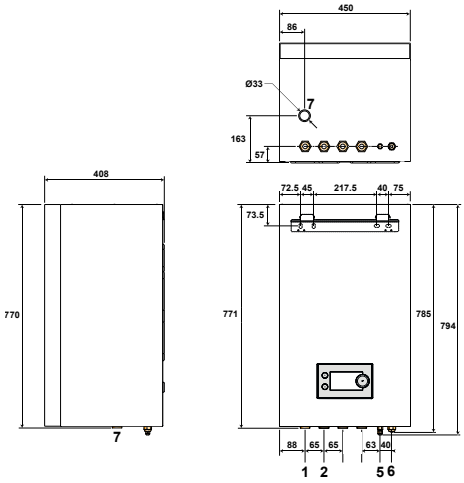

IDU2WH_F0001

KEY

① Heating return G 1"
② Heating flow G 1"
③ Boiler flow connection G 1" (with MIV-S/H only)
④ Boiler return connection G 1" (with MIV-S/H only)
⑤ Refrigerant gas connection: see below
⑥ Refrigerant fluid connection: see below

		Model	⑤ Refrigerant gas connection	⑥ Refrigerant fluid connection
Outdoor unit:	AWHPR ... MR R32	4,6 and 8	1/4" flare	1/2" flare
Indoor unit:	MIV-S 4-8 R32 /EM		1/4" flare	1/2" flare
Outdoor unit:	AWHP ..MR/TR	11 and 16	5/8" flare	3/8" flare
Indoor unit:	MIV-S/EM,ET		5/8" flare	3/8" flare

COMPONENTS

MIV-S /EM (R32 / 4, 6 & 8 KW)

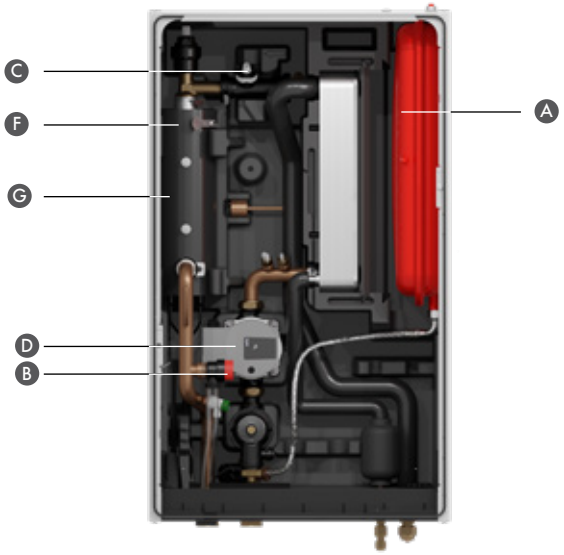

ALEZIOSR32_F0010

MIV-S/EM AND MIV-S/ET (R 410A /11 & 16 KW)

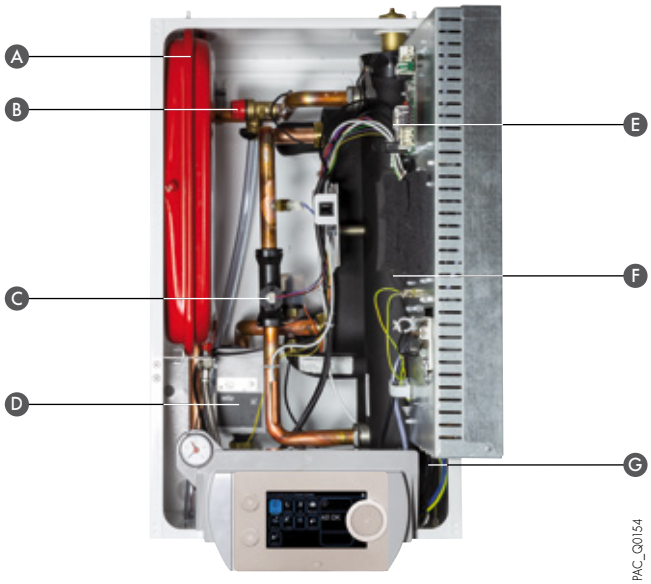

PAC_Q0154

A 8-litre expansion vessel
B Safety valve
C Flowmeter
D High efficiency heating pump
E Electronic board
F Decoupling cylinder
G Electrical resistance

MODEL SHOWN:

MIV-S/E with front panel removed.

TECHNICAL SPECIFICATIONS

ALEZIO S/H (HYDRAULIC BACKUP / BOILER)

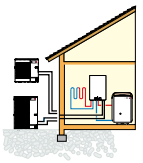

With hydraulic backup via boiler

MIV-S/H INDOOR MODULE SPECIFICATIONS

MAIN DIMENSIONS (mm AND INCHES)

MIV-S / H (R32 / 4 , 6 & 8 KW)

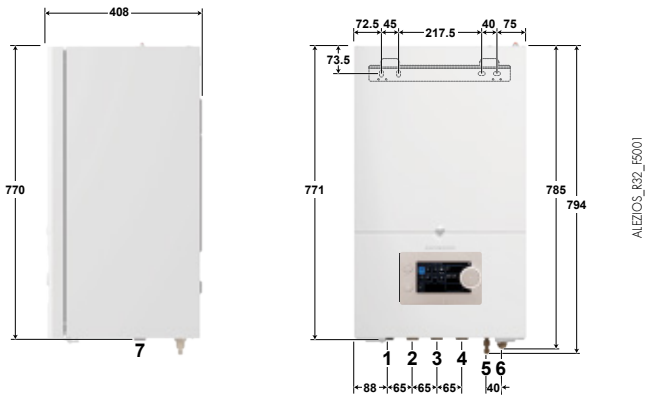

MIV-S/H (R410 / 11 & 16 KW)

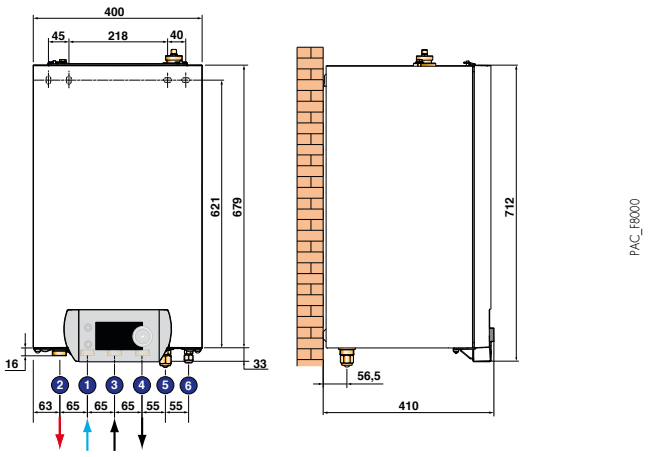

KEY

① Heating return G 1
② Heating flow G 1
③ Boiler flow connection G 1 (with MIV-S/H only)
④ Boiler return connection G 1 (with MIV-S/H only)
⑤ Refrigerant gas connection: see below
⑥ Refrigerant fluid connection: see below

		Model	⑤ Refrigerant gas connection	⑥ Refrigerant fluid connection
Outdoor unit:	AWHPR ... MR R32	4,6 and 8	1/4" flare	1/2" flare
Indoor unit:	MIV-S 4-8 R32 /EM		1/4" flare	1/2" flare
Outdoor unit:	AWHP ..MR/TR	11 and 16	5/8" flare	3/8" flare
Indoor unit:	MIV-S/EM,ET		5/8" flare	3/8" flare

MIV-S / H (R32 / 4 , 6 & 8 KW)

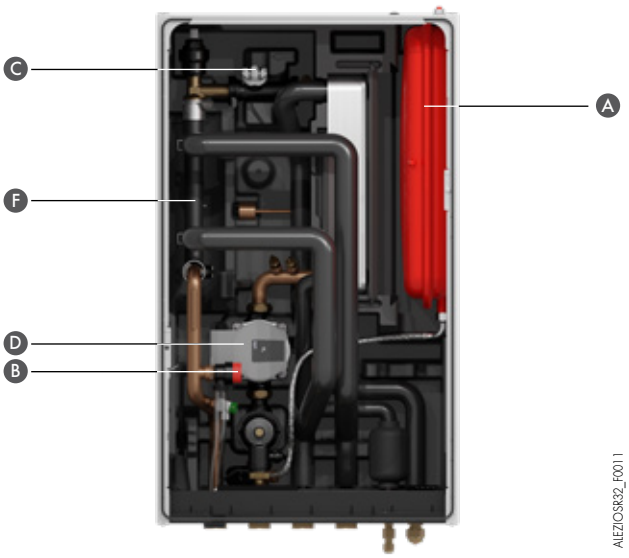

MIV-S/H (R410 / 11 & 16 KW)

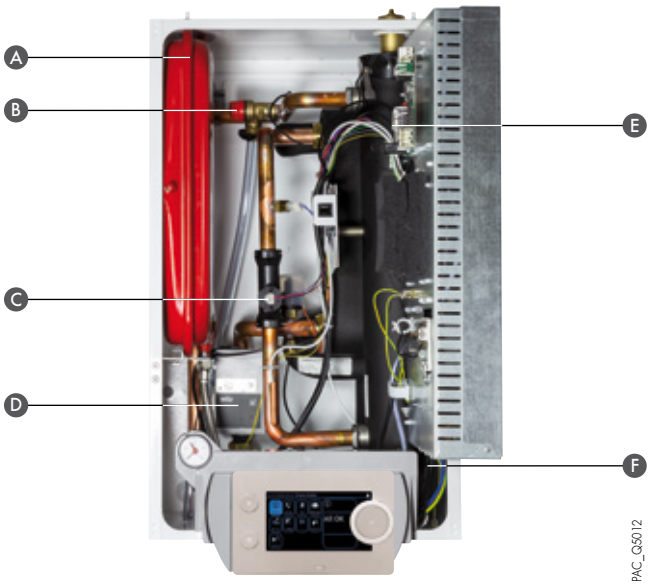

A 8-litre expansion vessel
B Safety valve
C Flowmeter
D High efficiency heating pump
E Electronic board
F Decoupling cylinder

MODEL SHOWN:

MIV-S/H with front panel removed and control panel folded down

TECHNICAL SPECIFICATIONS

OPERATING TEMP. LIMIT

In heating mode:
- Water: + 18°C/+ 60°C,
- Outside air: - 20°C/+ 35°C

In cooling mode:
- Water: + 18°C/+ 25°C,
- Outside air: +7°C/+ 46°C

MODEL

			ALEZIO S R32			ALEZIO S R410	
			4 MR	6 MR	8 MR	11 MR 11 TR	16 MR 16 TR
Energy efficiency class (SEE) (heating) (35°C)			A+++	A+++	A+++	A+++	A+++
Energy efficiency class (SEE) (heating) (55°C)			A++	A++	A++	A++	A+
SCOP (35°C/55°C)			4.50/3,44	4.52/3,38	4.50/3,34	4.54/3,20	4.45/3,10
Seasonal space heating energy efficiency under average temperature (35°C/55°C) *		%	177/135	178/132	177/131	178/125	175/121
Seasonal space heating energy efficiency under average temperature (35°C/55°C) (with outdoor sensor supplied as standard)		%	178/137	180/134	179/133	180/127	177/123
Heat output at +7°C/+35°C / Pmax (1)		kW	4.60/7,10	6.40/8.70	7.60/9.00	11.39/14.79	14.65/17.28
Heating COP at +7°C/+35°C (1)			5.20	5.00	4.77	4.65	4.22
Heating output at -7°C/+35°C / Pmax (1)		kW	2.93/6.10	4.65/7.30	6.01/7.70	8.09/10.59	9.83/12.37
Heating COP at -7°C/+35°C (1)			3.11	3.09	2.99	2.88	2.75
Outdoor module sound power (3)		dB[A]	58	58	59	69	68
Indoor module sound power (3)		dB[A]	33	33	33	53	53
Outdoor module perceived sound level (4)		dB[A]	36	36	37	47	47
Indoor module perceived sound level (4)		dB[A]	25	25	25	45	45
Cooling output at +35°C/+18°C (5)		kW	6.0	7.0	7.1	11.16	14.46
Cooling EER at +35°C/+18°C (5)			5.35	5.14	4.88	4.75	3.96
Cooling output at +35 °C/+7 °C (5)		kW	4.50	6.50	6.50	-	-
Cooling EER at +35 °C/+7 °C (5)			3.6	3.09	3.09	-	-
Nominal water flow rate at $\Delta T = 5$ K		m^3/h	0.79	1.10	1.31	1.96	2.53
Total dynamic head at nominal flow rate at $\Delta T = 5$ K		mbar	670	520	340	136	-
Power supply voltage of the outdoor unit	- MR - TR	V	230 V monofase	230 V monofase	230 V monofase	230 V monofase 400 V trifase	230 V monofase 400 V trifase
Curved circuit breaker protection C outdoor unit	- MR - TR	A	16	16	16	32 16	40 16
Refrigerant fluid R32		kg	1.2	1.2	1.2	-	-
Refrigerant fluid R410A		kg	-	-	-	4.6	4.6
CO2 equivalent		tonne	0.81	0.81	0.81	9.6	9.6
Refrigerant connection (liquid-gas)		pouce	1/4-1/2	1/4-1/2	1/4-1/2	3/8-5/8	3/8-5/8
Max. pre-loaded length		m	10	10	10	10	10
Length min - max **		m	5-30	5-30	5-30	2-75	2-75
Weight of outdoor unit without charge	- MR - TR	kg	54	54	54	118 130	118 130
Weight of indoor module without charge (tank)		kg	32	32	32	37	37

* Values certified according directives n°813/2013
** Max height difference 30 m for all models
*** Values given as an indication
(1) Heating mode: outside air temperature/water temperature at outlet, performance in accordance with EN 14511-2
(3) Test performed in accordance with standard EN 12102-1
(4) At 1 m in a free field (5 m for the outdoor unit)
(5) Air conditioning mode: outdoor air temperature/water temperature at the outlet, performance according to EN 14511-2.

TECHNICAL SPECIFICATIONS

ALEZIO S/E V200 AND **AND /H V200**
(WITH INTEGRATED 180 DHW LITER TANK)

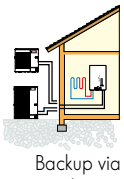

Backup via immersion heater

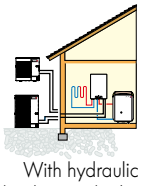

With hydraulic backup via boiler

MIV-S V 200 INTERNAL MODULE FEATURES

MAIN DIMENSIONS (mm AND INCHES)

MIV-S V200

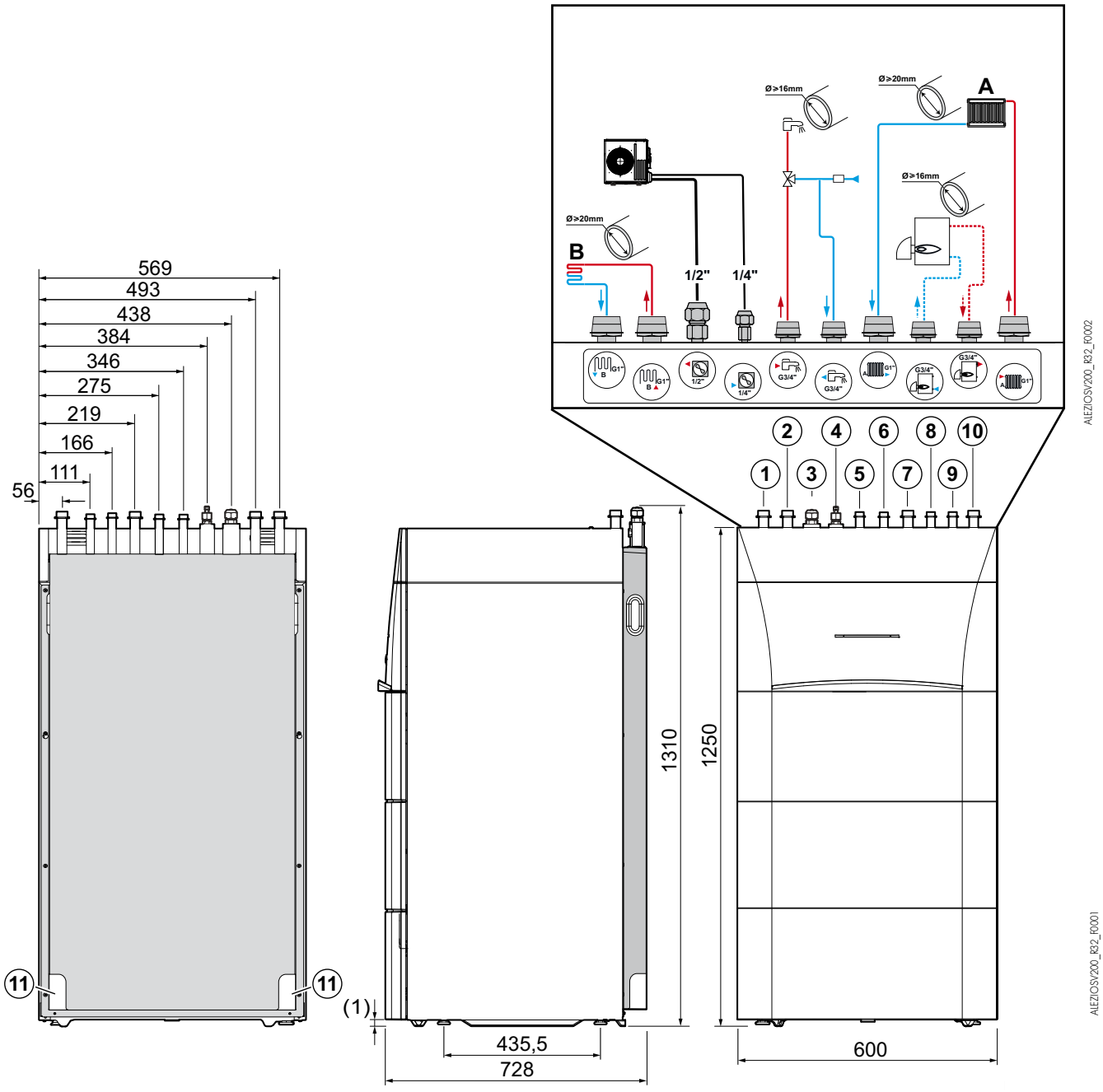

① Circuit B return - second circuit option
② Flow circuit B - second circuit option
③ Refrigerant connection - gas line
④ Refrigerant connection - fluid line
⑤ Domestic hot water outlet G3/4"
⑥ Domestic cold water inlet G3/4"
⑦ Return circuit A - direct heating circuit
⑧ Flow to auxiliary boiler G3/4" (only wity hydraulic back-up version)
⑨ Return to auxiliary boiler G3/4" (only wity hydraulic back-up version)
⑩ Flow circuit A - direct heating circuit
⑪ Condensates drain
(1) Feet adjustable

		Model	⑤ Refrigerant gas connection	⑥ Refrigerant fluid connection
Outdoor unit:	AWHPR ... MR R32	4,6 and 8	1/4" flare	1/2" flare
Indoor unit:	MIV-S 4-8 R32 /EM		1/4" flare	1/2" flare
Outdoor unit:	AWHP ..MR/TR	11 and 16	5/8" flare	3/8" flare
Indoor unit:	MIV-S/EM,ET		5/8" flare	3/8" flare

TECHNICAL SPECIFICATIONS

ALEZIO S/E V200 AND **/H V200**

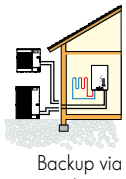

Backup via immersion heater

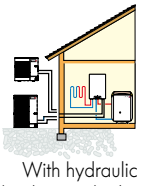

With hydraulic backup via boiler

ALEZIO S V200 (/E) WITH ELECTRICAL BACKUP

REAR VIEW

(rear panel removed)

All the hydraulic and refrigerant connections are made via the top part, which means the module can be positioned against a wall or in a corner.

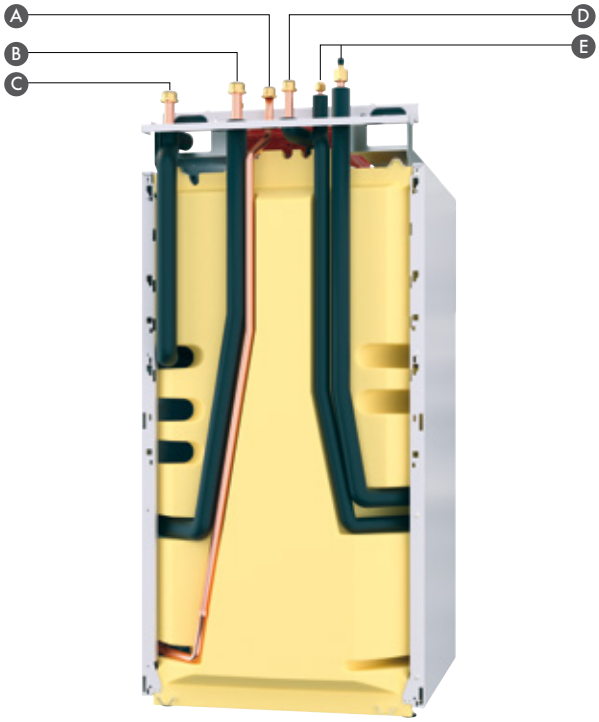

PAC_Q9301

A Domestic cold water inlet
B Heating return
C Heating flow
D DHW outlet"
E Refrigerant connections

TANK DETAILS

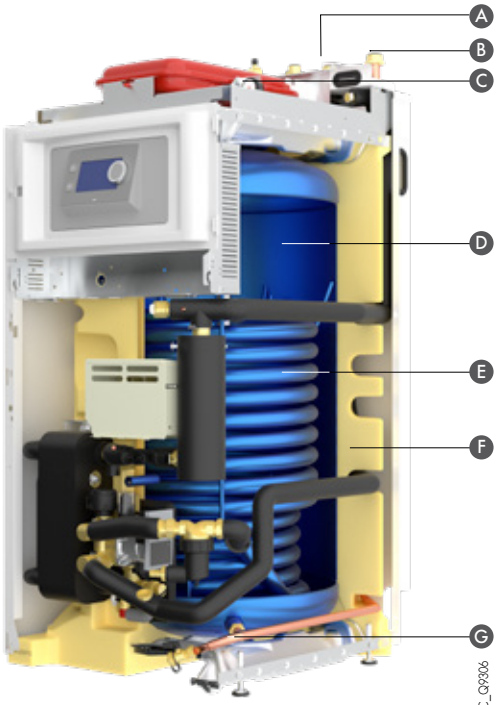

PAC_Q9306

A Heating return
B Heating flow
C Mechanical manometer
D Enamelled tank
E Coil
F Injected foam insulation
G Domestic cold water inlet

ALEZIO S V200 (/H) WITH HYDRAULIC BACKUP

REAR VIEW

(rear panel removed)

All the hydraulic and refrigerant connections are made via the top part, which means the module can be positioned against a wall or in a corner.

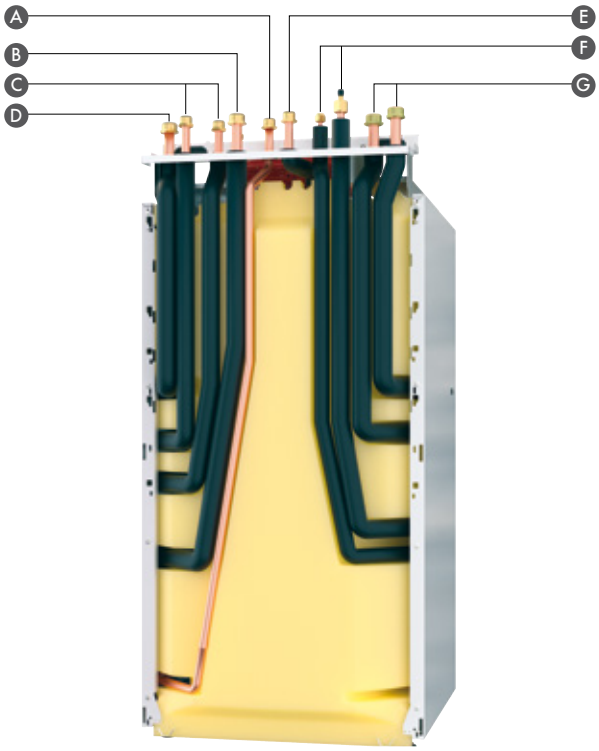

PAC_Q9300

A Domestic cold water inlet
B Heating return
C Hydraulic backup flow/return
D Heating flow
E DHW outlet
F Refrigerant connections
G Heating 3-way valve flow/return

TANK DETAILS

(viewed with the EH858 (7657050) kit fitted inside the enclosure)

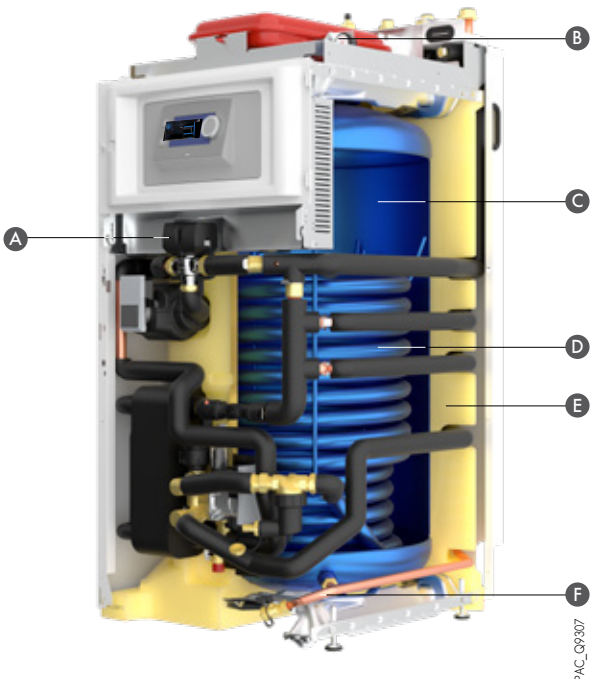

PAC_Q9307

A 3-way valve second circuit with pump (EH858 option) fitted below the enclosure
B Mechanical manometer
C Enamelled tank
D Coil
E Injected foam insulation
F Domestic cold water inlet

TECHNICAL SPECIFICATIONS

OPERATING TEMP. LIMIT

In heating mode:
- Water: + 18°C/+ 60°C,
- Outside air: - 20°C/+ 35°C

In cooling mode:
- Water: + 18°C/+ 25°C,
- Outside air: +7°C/+ 46°C

In cooling mode (with EH859 kit):
- Water: + 7°C/+ 25°C,
- Outside air: + 7°C/+ 46°C

MODEL

		ALEZIO S ...V200 R32			ALEZIO S ...V200 R410A	
		4 MR	6 MR	8 TR	11 MR 11 TR	16 MR 16 TR
Energy efficiency class (SEE) (heating) (35°C)		A+++	A+++	A++	A++/A	A++/A
Energy efficiency class (SEE) (heating) (55°C)		A++	A++	A++	A++/A	A+/A
SCOP (35°C/55°C)		4,48/3,43	4,5/3,37	4,48/3,21	4,54/3,20	4,45/3,10
Seasonal space heating energy efficiency under average temperature (35°C/55°C) *	%	176/134	177/132	176/125	178/125	175/121
Seasonal space heating energy efficiency under average temperature (35°C/55°C) (with outdoor sensor supplied as standard)	%	178/136	179/134	178/127	180/127	175/123
DHW seasonal energy efficiency (M/L cycle)	%	127/138	111/113	111/113	114	114
Heat output at +7°C/+35°C/ Pmax (1)	kW	4.60/7.10	6.40/8.70	7.60/9.00	11.39/14.79	14.65/17.28
Heating COP at +7°C/+35°C (1)		5.20	5.00	4.73	4.65	4.22
Heating output at -7°C/+35°CC/ Pmax (1)	kW	2.93/6.10	4.65/7.30	6.01/7.70	8.09/10.59	9.83/12.37
Heating COP at -7°C/+35°C (1)		3.11	3.09	2.99	2.88	2.75
Max. usable hot water volume (Vmax) (2)	litre	255	254	254	231	231
Heating time (th) de 10°C to 55°C (2)	hh: mm	1h32	1h31	1h30	1h33	1h11
Power absorbed at stabilised rate (Pes) (2)	W	28	33	33	35	35
Draw-off cycle (2)		L	L	L	L	L
COP_DHW (M/L draw-off cycle) (2)		3.05	2.70	2.70	2.72	2.72
Outdoor module sound power (3)	dB[A]	58	58	59	69	69
Indoor module sound power (3)	dB[A]	29	31	32	48	48
Outdoor module perceived sound level (4)	dB[A]	36	36	37	47	47
Indoor module perceived sound level (4)	dB[A]	21	23	24	40	40
Cooling output at +35°C/+18°C (5)	kW	6.0	7.0	7.1	11.16	14.46
Cooling EER at +35°C/+18°C (5)		5.18	4.88	4.88	4.75	3.96
Cooling output at +35°C/+7°C (5)	kW	4.5	6.5	6.5	10.54	10.37
Cooling EER at +35°C/+7°C (5)		3,6	2.83	2.79	2.77	2.89
Nominal water flow rate at $\Delta T = 5$ K	m^3/h	0,79	1.10	1.31	1.96	2.53
Total dynamic head at nominal flow rate at $\Delta T = 5$ K	mbar	670	520	340	250	-
Power supply voltage of the outdoor unit - MR - TR	V	230 V single-phase -	230 V single-phase -	230 V single-phase -	230 V single-phase 400 V tri	230 V single-phase 400 V tri
Curved circuit breaker protection C outdoor unit - MR - TR	A	16	16	16	32 16	32 16
DHW tank capacity	litre	177	177	177	177	177
Refrigerant fluid R 32	kg	1.2	1.2	1.2	-	-
Refrigerant fluid R410A	kg	-	-	-	4.6	4.6
CO2 equivalent	tonne	0.81	0.81	0.81	9.6	9.6
Refrigerant connection (liquid-gas)	pouce	1/4-1/2	1/4-1/2	1/4-1/2	3/8-5/8	3/8-5/8
Max. pre-loaded length	m	10	10	10	10	10
Length min - max **	m	5-30	5-30	5-30	2-75	2-75
Weight of outdoor unit without charge - MR - TR	kg	54	54	54	118 130	118 130
Weight of indoor module without charge in DHW tank	kg	32	32	32	140	140

* Values certified according directives n°813/2013
** Max height difference 30 m for all models
*** Values given as an indication
(1) Heating mode: outside air temperature/water temperature at outlet, performance in accordance with EN 14511-2
(2) Draw-off cycle M in accordance with EN 16147
(3) Test performed in accordance with standard EN 12102-1
(4) At 1 m in a free field (5 m for the outdoor unit)
(5) Air conditioning mode: outdoor air temperature/water temperature at the outlet, performance according to EN 14511-2.

WATER TEMPERATURE

ALEZIO S heat pump models can produce hot water up to a temperature of 60°C. The graph shows the water temperature produced for each model based on the outside temperature.

ALEZIO S R32 4 MR/EM - ALEZIO S R32 6 MR/EM - ALEZIO S V200 R32 4 MR/EM - ALEZIO S V200 R32 6 MR/EM

ALEZIO S R32 8 MR/EM - ALEZIO S V200 R32 8 MR/EM

Water temperature (°C).

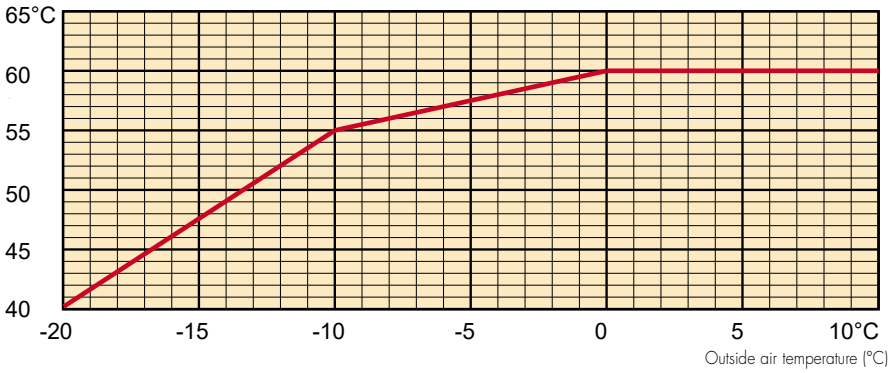

PAC32_FP990

ALEZIO S 11 AND 16 MR/TR

Water temperature (°C).

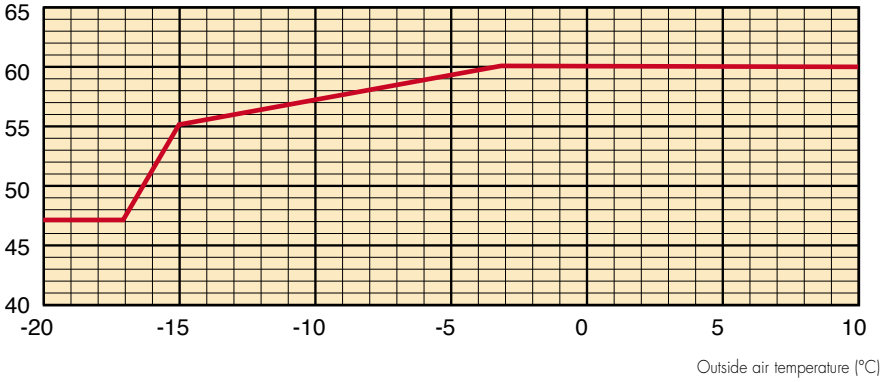

HPI_F0047

ALEZIO S V200 11 AND 16 MR/TR

Temperature of water produced (°C).

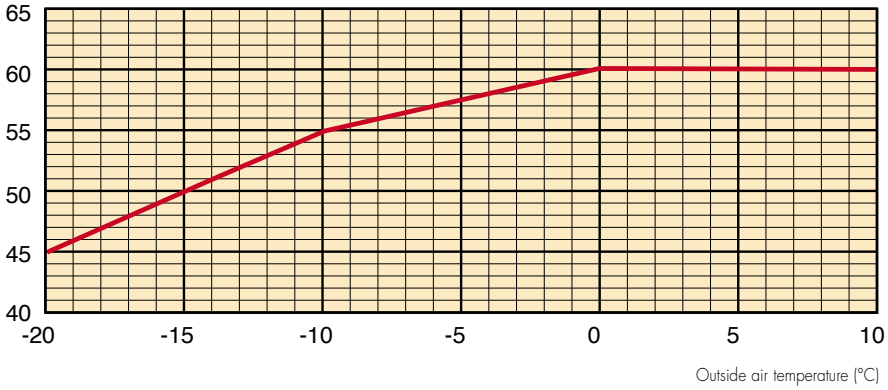

HPI_F0047

ALEZIO-S/SV 200 4 MR (WITH OUTDOOR UNIT AWHPR 4 MR - R32)

OUTSIDE TEMPERATURE [°C]	COOLING/ AIR CONDITIONNING		HEATING													
	7	18	25		35		40		45		50		55		60	
	Output (kW)	Output (kW)	Output (kW)	COP	Output (kW)	COP	Output (kW)	COP	Output (kW)	COP	Output (kW)	COP	Output (kW)	COP	Output (kW)	COP
-20	-	-	-	-	3.20	2.18	3.00	1.93	-	-	-	-	-	-	-	-
-15	-	-	-	-	4.30	2.45	4.10	2.17	3.90	1.89	-	-	-	-	-	-
-10	-	-	5.80	3.04	5.40	2.73	5.10	2.41	4.70	2.10	4.30	1.75	3.80	1.41	-	-
-7	-	-	6.50	3.22	6.10	2.89	5.70	2.56	5.20	2.23	4.60	1.84	4.00	1.45	-	-
2	-	-	6.00	3.45	5.90	3.14	5.80	2.83	5.70	2.52	5.60	2.20	5.50	1.89	5.40	1.58
7	-	-	7.30	4.89	7.10	4.38	7.00	3.87	6.80	3.36	6.40	2.83	5.90	2.30	5.50	1.77
12	-	-	8.70	5.94	8.50	5.25	8.30	4.56	8.20	3.87	7.70	3.30	7.20	2.72	6.70	2.15
15	-	-	7.70	6.56	7.50	5.77	7.30	4.99	7.10	4.20	6.70	3.56	6.30	2.92	5.90	2.28
20	1.85	2.85	8.40	7.37	8.20	6.45	8.00	5.54	7.80	4.62	7.40	3.91	6.90	3.20	6.50	2.49
25	2.3	2.8	-	-	-	-	-	-	-	-	-	-	-	-	-	-
30	3.32	4.5	-	-	-	-	-	-	-	-	-	-	-	-	-	-
35	4.5	6	-	-	-	-	-	-	-	-	-	-	-	-	-	-

ALEZIO-S/SV 200 6 MR (WITH OUTDOOR UNIT AWHPR 6 MR - R32)

OUTSIDE TEMPERATURE [°C]	COOLING/ AIR CONDITIONNING		HEATING													
	7	18	25		35		40		45		50		55		60	
	Output (kW)	Output (kW)	Output (kW)	COP	Output (kW)	COP	Output (kW)	COP	Output (kW)	COP	Output (kW)	COP	Output (kW)	COP	Output (kW)	COP
-20	-	-	-	-	4.70	2.10	4.60	1.93	-	-	-	-	-	-	-	-
-15	-	-	-	-	5.70	2.48	5.50	2.27	5.30	2.06	-	-	-	-	-	-
-10	-	-	6.90	2.90	6.70	2.67	6.50	2.45	6.20	2.23	6.10	1.99	5.90	1.75	-	-
-7	-	-	7.50	3.03	7.30	2.79	7.10	2.56	6.80	2.33	6.60	2.07	6.40	1.82	-	-
2	-	-	6.70	3.69	6.70	3.33	6.60	2.96	6.60	2.60	6.60	2.30	6.60	2.00	6.60	1.70
7	-	-	8.90	5.05	8.70	4.50	8.50	3.96	8.30	3.41	8.10	3.00	8.00	2.60	7.80	2.19
12	-	-	10.50	5.88	10.20	5.22	9.90	4.56	9.60	3.90	9.40	3.42	9.30	2.94	9.10	2.46
15	-	-	9.70	6.46	9.40	5.70	9.10	4.94	8.70	4.18	8.60	3.62	8.40	3.06	8.20	2.50
20	1.37	1.78	10.60	7.14	10.30	6.27	9.90	5.40	9.50	4.53	9.30	3.91	9.10	3.29	8.90	2.67
25	3.1	3.32	-	-	-	-	-	-	-	-	-	-	-	-	-	-
30	4.9	5.39	-	-	-	-	-	-	-	-	-	-	-	-	-	-
35	6.5	7	-	-	-	-	-	-	-	-	-	-	-	-	-	-

ALEZIO-S/SV 200 8 MR (WITH OUTDOOR UNIT AWHPR 8 MR - R32)

OUTSIDE TEMPERATURE [°C]	COOLING/ AIR CONDITIONNING		HEATING													
	7	18	25		35		40		45		50		55		60	
	Output (kW)	Output (kW)	Output (kW)	COP	Output (kW)	COP	Output (kW)	COP	Output (kW)	COP	Output (kW)	COP	Output (kW)	COP	Output (kW)	COP
-20	-	-	-	-	5.00	2.04	4.80	1.87	-	-	-	-	-	-	-	-
-15	-	-	-	-	6.00	2.40	5.80	2.20	5.60	2.00	-	-	-	-	-	-
-10	-	-	7.30	2.81	7.10	2.59	6.80	2.38	6.60	2.16	6.40	1.93	6.20	1.70	-	-
-7	-	-	8.00	2.93	7.70	2.71	7.40	2.48	7.20	2.25	7.00	2.01	6.80	1.76	-	-
2	-	-	7.20	3.55	7.10	3.21	7.10	2.88	7.10	2.55	7.10	2.21	7.10	1.86	7.10	1.52
7	-	-	9.20	4.95	9.00	4.42	8.80	3.90	8.60	3.37	8.40	3.01	8.20	2.65	8.00	2.29
12	-	-	10.90	5.79	10.60	5.14	10.30	4.50	10.00	3.85	9.80	3.43	9.60	3.00	9.50	2.58
15	-	-	10.10	6.37	9.80	5.62	9.50	4.88	9.20	4.13	9.00	3.66	8.80	3.18	8.60	2.71
20	1.55	1.67	11.10	7.02	10.70	6.17	10.30	5.33	10.00	4.48	9.70	3.93	9.50	3.43	9.30	2.91
25	3.35	3.18	-	-	-	-	-	-	-	-	-	-	-	-		
30	4.97	5.65	-	-	-	-	-	-	-	-	-	-	-	-		
35	6.5	7	-	-	-	-	-	-	-	-	-	-	-	-		

ALEZIO-S/SV 200 11 MR/TR (WITH OUTDOOR UNIT AWHP 11 MR/TR - R410A)

OUTSIDE TEMPERATURE [°C]	COOLING/ AIR CONDITIONNING				FLOW TEMPERATURE [°C] HEATING													
	7		18		25		35		40		45		50		55		60	
	Output (kW)	EER	Output (kW)	EER	Output (kW)	COP	Output (kW)	COP	Output (kW)	COP	Output (kW)	COP	Output (kW)	COP	Output (kW)	COP	Output (kW)	COP
-20	-	-	-	-	-	-	6.87	1.79	6.71	1.64	6.55	1.49	-	-	-	-	-	-
-15	-	-	-	-	-	-	8.17	2.16	8.07	1.93	7.96	1.69	7.87	1.52	7.77	1.34	-	-
-10	-	-	-	-	9.69	2.97	9.53	2.50	9.44	2.25	9.36	1.98	9.13	1.76	8.90	1.52	-	-
-7	-	-	-	-	10.87	3.27	10.59	2.73	10.44	2.45	10.3	2.14	10	1.91	9.69	1.62	-	-
2	-	-	-	-	10	3.86	10	3.32	10	2.99	10	2.66	10	2.28	10	1.89	9.4	1.49
7	-	-	-	-	11.2	4.89	11.20	4.45	11.2	3.94	11.2	3.42	11.2	3.02	11.2	2.6	11.2	2.13
12	-	-	-	-	12.9	5.6	12.9	5.16	12.9	4.54	12.9	3.92	12.9	3.48	12.9	2.99	12.9	2.48
15	-	-	-	-	13.6	6	13.6	5.49	13.6	4.83	13.6	4.18	13.6	3.71	13.6	3.21	13.6	2.65
20	10.10	3.78	15.10	4.42	14.7	6.62	14.7	5.96	14.7	5.27	14.7	4.57	14.7	4.06	14.7	3.52	14.7	3.1
25	9.80	3.50	14.90	4.25	-	-	-	-	-	-	-	-	-	-	-	-	-	-
30	9.70	3.22	14.80	4.09	-	-	-	-	-	-	-	-	-	-	-	-	-	-
35	9.10	2.75	14.00	3.54	-	-	-	-	-	-	-	-	-	-	-	-	-	-

ALEZIO-S/SV 200 16 MR/TR (WITH OUTDOOR UNIT AWHP 16 MR/TR - R410A)

OUTSIDE TEMPERATURE [°C]	COOLING/ AIR CONDITIONNING				FLOW TEMPERATURE [°C] HEATING													
	7		18		25		35		40		45		50		55		60	
	Output (kW)	EER	Output (kW)	EER	Output (kW)	COP	Output (kW)	COP	Output (kW)	COP	Output (kW)	COP	Output (kW)	COP	Output (kW)	COP	Output (kW)	COP
-20	-	-	-	-	-	-	8.03	1.74	7.89	1.6	7.75	1.46	-	-	-	-	-	-
-15	-	-	-	-	-	-	9.55	2.1	9.49	1.88	9.42	1.66	9.33	1.5	9.23	1.32	-	-
-10	-	-	-	-	11.2	2.92	11.13	2.43	11.1	2.19	11.07	1.94	10.82	1.73	10.57	1.51	-	-
-7	-	-	-	-	12.56	3.21	12.37	2.65	12.28	2.38	12.18	2.1	11.85	1.89	11.52	1.66	-	-
2	-	-	-	-	12	3.76	12	3.24	12	2.88	12	2.52	12	2.2	12	1.86	12	1.54
7	-	-	-	-	16	4.58	16	4.1	16	3.67	16	3.23	15.89	2.86	15.21	2.52	14.5	2.13
12	-	-	-	-	18.39	5.38	18.39	4.74	18.39	4.19	18.39	3.64	18.18	3.25	17.43	2.87	16.7	2.44
15	-	-	-	-	19.44	5.66	19.44	5.01	19.44	4.43	19.44	3.84	19.19	3.43	18.42	3.02	17.7	2.58
20	13.9	2.93	16.9	4.05	20.62	5.95	20.62	5.31	20.62	4.71	20.62	4.1	20.47	3.66	19.73	3.25	19	2.8
25	13.5	2.77	16.9	4.02	-	-	-	-	-	-	-	-	-	-	-	-	-	-
30	13.4	2.63	17	4.03	-	-	-	-	-	-	-	-	-	-	-	-	-	-
35	12.5	2.32	16	3.59	-	-	-	-	-	-	-	-	-	-	-	-	-	-

These performance levels are not certified, so they should only be used to size the heat pump.

OUTDOOR UNIT TECHNICAL SPECIFICATIONS

MAIN DIMENSIONS (mm AND INCHES)

AWHPR 4, 6 AND 8 MR

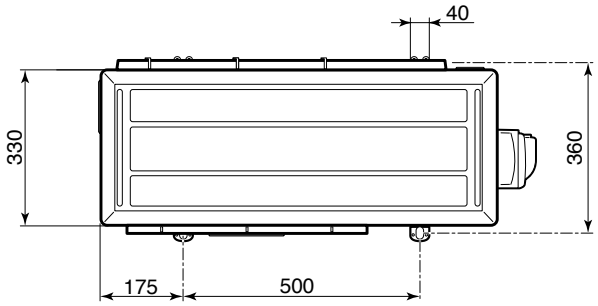

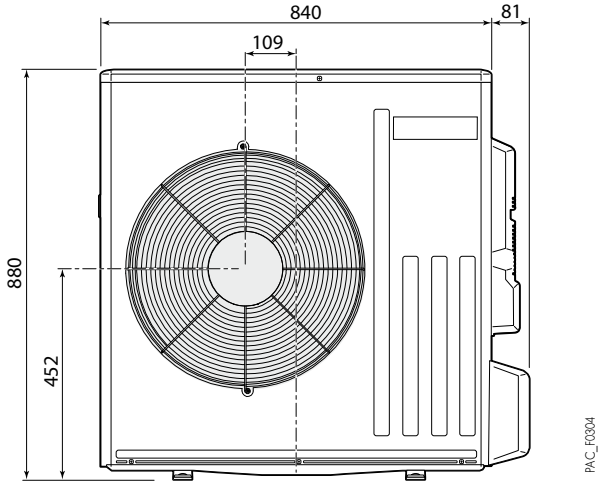

AWHP 11 AND 16 MR/TR-2

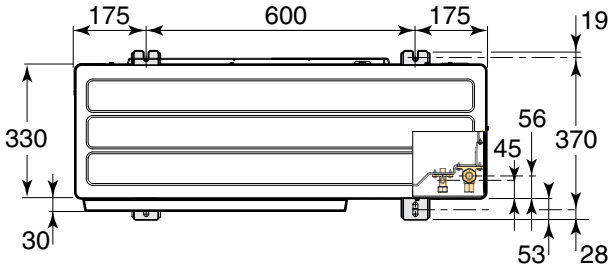

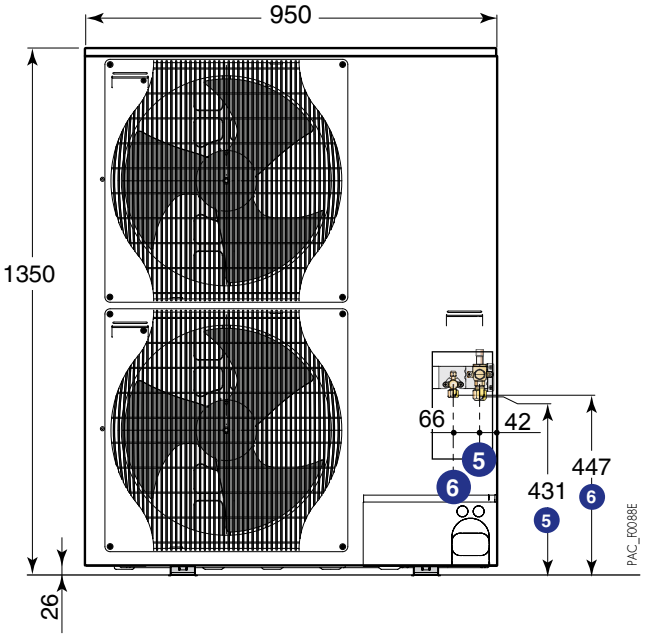

	Model	⑤ Refrigerant gas connection	⑥ Refrigerant fluid connection
Outdoor module AWHPR ... MR/TR	4, 6 and 8	1/2" flare	1/4" flare
Indoor unit	MIV-S V200 R32	1/2" flare	1/4" flare
Outdoor unit AWHP ..MR/TR	11 to 16	5/8" flare	3/8" flare
Indoor module	MIV-S V200	5/8" flare	3/8" flare

OUTDOOR UNIT TECHNICAL SPECIFICATIONS

COMPONENTS

AWHPR 4MR, 6MR AND 8 MR

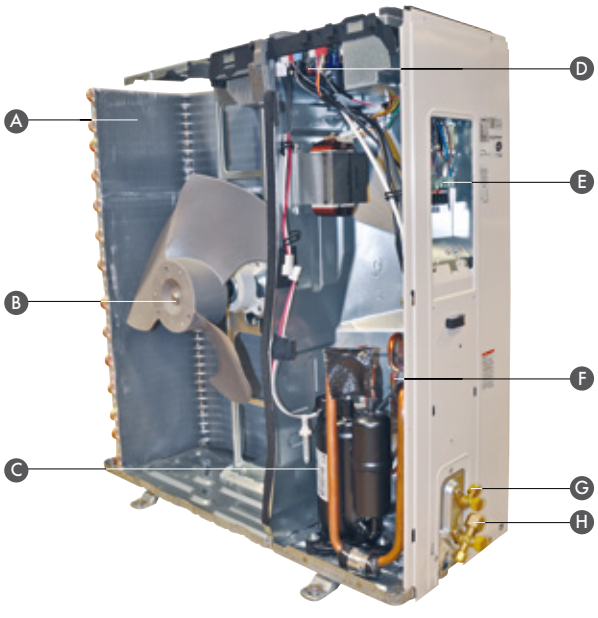

A Evaporator
B Fan
C Compressor
D Electronic board
E Electrical connection
F 4-way cycle reversal valve
G Refrigerant fluid connection
H Refrigerant gas connection

AWHP 11 AND 16 MR/TR-2

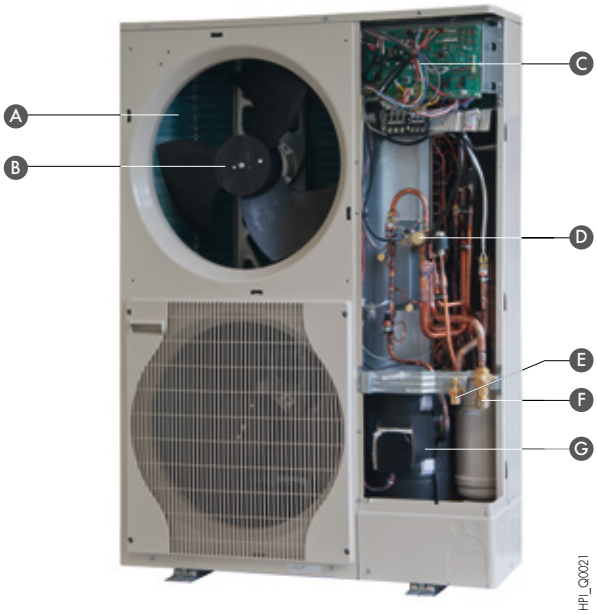

A Evaporator
B Fan
C Electronic board
D 4-way cycle reversal valve
E Refrigerant fluid connection
F Refrigerant gas connection
G "Inverter" compressor with power accumulator

CONTROL PANEL
DIEMATIC EVOLUTION

DIEMATIC EVOLUTION CONTROL PANEL

The control panels fitted to the MIV-S and MIV-S V200 modules of ALEZIO S / SV 200 heat pumps incorporate an electronic control system used to adapt heating output to the actual needs of the installation according to the outside temperature (sensor provided).
To do this, the control system operates the modulation of the compressor (via the BUS cable connecting the outside unit to the MIV-S or MIV-S V200) and, where applicable, manages backup via the boiler (MIV-S/H or MIV-S/H V200) or the electrical resistor (MIV-S/E or MIV-S/E V200).
With MIV-S, it can be used to manage a single direct circuit, which may be a radiator circuit or a low temperature underfloor heating circuit (or even fan coil units with the MIV-S V200). With MIV-S, it can also be used to manage an additional circuit with a 3-way mixing valve. Moreover, this control system manages the reversibility of the heating in winter/cooling in summer and incorporates a power cut-off function and an emergency help mode. The regulation can also be used to manage domestic hot water.



CONTROL OPTIONS

SELECTION OF OPTIONS ACCORDING TO THE CIRCUITS CONNECTED

Type of circuit	DHW reversible valve	direct	valve	direct + 1 valve	direct + decoupled valve
Alezio S R32	EH784	factory-set (1)	HK416 + HK152	HK416 + HK152	-
ALEZIO S	EH784	factory-set (1)	EH783 + HK152	EH783 + HK152	-
Alezio S V200 R32	factory-set	factory-set (1)	HK378	HK378 + EH858	HK378 + HK152 + HK146
ALEZIO S V200	factory-set	factory-set (1)	EH862	EH862 + EH858	EH862 + HK152 + HK146

(1) A room thermostat can be added: package AD337, AD338, AD324 or AD341

CONTROL OPTIONS



WIRED PROGRAMMABLE ROOM THERMOSTAT - REF 7768817 / AD337
WIRELESS PROGRAMMABLE ROOM THERMOSTAT - REF 7768818 / AD338

Programmable thermostats provide weekly programming and regulation of the heating according to the various operating modes: "Automatic" depending on the programming, "Permanent" at a set temperature or "Holiday". The wireless version includes an emitter module which is fixed to the wall near the MIV-S.
The non-programmable thermostat is only used to regulate the room temperature based on the specific setpoint.



WIRELESS WIFI SMART TC° ROOM THERMOSTAT (R-BUS) - REF 7691377 / AD341
ADDITIONNAL WIRELESS WIFI SMART TC° ROOM THERMOSTAT (R-BUS) FOR 2ND CIRCUIT- REF 7765144 / AD342
WIRED WIFI SMART TC° ROOM THERMOSTAT (R-BUS) - REF 7691375 / AD324

This enables **remote control of the heating and domestic hot water** via an app which is free to download and **simple to use, with the option of providing a professional with access to your installation (with authorisation)**.
It is used to remote control the installation, including programmed times of operation and access to settings such as checking the energy consumption using data logs.
Smart TC° can also be used as a standard thermostat without using WiFi or any other app, although you are recommended to keep it connected to the Internet to benefit from the latest updates.



WIRELESS OUTSIDE TEMPERATURE SENSOR - REF 7776874 / AD346

The radio outside temperature sensor can be delivered as optional equipment for systems in which the installation of the external wire connection sensor delivered with DIEMATIC EVOLUTION control panel would be too complex.
This sensor must be used with a radio remote control (AD341), already combined with an "appliance radio module".



UNDERFLOOR HEATING THERMOSTAT CONNECTION KIT - REF 7624902 / HA255

Wired for connecting a safety thermostat to the circulating pump in an underfloor heating circuit.



MIXING CIRCUIT CONTROL KIT (ALEZIO S 11-16) - REF: 7683828 / EH783
MIXING CIRCUIT CONTROL KIT (ALEZIO S R32) - REF: 7789286 / HK416



MIXING CIRCUIT CONTROL CIRCUIT KIT, ALEZIO S V200 11-16) - REF 7689751 / EH862
MIXING CIRCUIT CONTROL KIT (ALEZIO S V200 R32) - REF 7785338 / HK378

Used to add regulation of a mixing valve circuit to the direct circuit available in the factory configuration



HUMIDITY SENSOR KIT - REF 100019114 / HK27

Sensor for measuring humidity in the flow part of an installation with underfloor heating/cooling. In "refreshing" mode, the heat pump is stopped if the humidity detected is high, avoiding the appearance of condensation.



HUMIDITY SENSOR (0 - 10 V) - REF 7622433 / HZ64

Collector for measuring the humidity in your installation in the flow part of the underfloor heating/cooling. In cooling mode, it is used to adapt the water flow temperature to avoid the appearance of condensation.

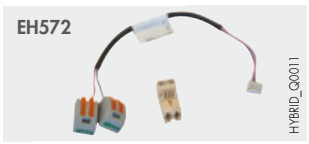

OUTDOOR MODULE SILENT RUNNING KIT (ONLY ALEZIO S/ S V200 11-16) - REF: 7636899 / EH572

After installation, this enables the level of noise produced by the outdoor unit to be reduced.



FLOW SENSOR DOWNSTREAM OF VALVE (LENGTH 2.5 M) - REF 88017017 / AD199

This sensor is required to connect the first with mixing valve to a boiler fitted with a DIEMATIC Evolution control panel. When using the package «Internal 3-way valve kit» HK21, it is not necessary to order this sensor which is originally included in the HK21 package.

OPTIONS FOR THE OUTDOOR UNIT

EH95 + EH250



PAC_Q0032

WALL MOUNTING SUPPORT + ANTI-VIBRATION MOUNTS:

- **FOR AWHPR 4 MR, 6 AND 8 MR-2... - REF 00011222 / EH95**
- **FOR AWHP 11 AND 16 MR/TR-2... - REF 100018409 / EH250**

This kit enables the outdoor unit to be fixed to the wall.
Anti-vibration mounts are included, which reduce the transmission of vibrations.

EH879



PAC_Q9120

RUBBER SUPPORT FOR FLOOR-STANDING ASSEMBLY (600 mm) REF 7694974 / EH879

A resistant rubber support, for installing the outdoor unit on the ground, compatible with all outdoor units

EH112



PAC_Q0098

SUPPORT FOR FLOOR-STANDING INSTALLATION OF THE ALEZIO S (OUTDOOR UNIT) - REF 100012533 / EH112

Durable, highly resistant PVC support, for installing the outdoor unit on the ground. Bolts, washers and nuts are included for quick and easy assembly.

EH114 + EH115 + EH116 + EH142



PAC_Q0097

- **5/8" - 3/8" REFRIGERANT CONNECTION KIT:**
  - **LENGTH 5 m - REF 100012535 / EH114**
  - **LENGTH 10 m - REF 100012536 / EH115**
  - **LENGTH 20 m - REF 100012537 / EH116**
- **1/2" - 1/4" REFRIGERANT CONNECTION KIT:**
  - **LENGTH 10 m - REF 100015476 / EH142**

High-quality insulated copper pipe which limits heat loss and condensation.

- **CONDENSATE DRAINING KITS:**
  - **AWHPR 4, 6 AND 8MR REF 7727910 / EH982**
  - **AWHP 11 AND 16 MR/TR REF 7727908 / EH981**

OPTIONS FOR THE INDOOR MODULE

EH85 EH60



PAC_Q0021 - 8962Q024

BUFFER TANK: • B 80 T - REF 100008841 / EH85 • B 150 T - REF 100004415 / EH60

This 80- or 150-litre tank is used to limit compressor short-cycle operation and to provide a reserve for the defrosting phase on reversible air-to-water heat pumps.
It is also recommended for all heat pumps connected to installations with a water volume of less than 5 l/kW of heat output.
EXAMPLE: Heat pump output = 10 kW
Minimum volume of installation: 50 litres
DIMENSIONS: B 80 T: H 850 x L 440 x D 450 mm
B 150 T: H 1003 x Ø 601 mm

HK154
HK155
HK156
HK157



PAC_Q9160

HYDRAULINK V200 MOUNTING FRAME

- **STRAIGHT 1 CIRCUIT - REF 7746412 / HK154**
- **STRAIGHT 2 CIRCUITS - REF 7746415 / HK155**
- **LEFT 1 CIRCUIT - REF 7746417 / HK156**
- **LEFT 2 CIRCUITS - REF 7746419 / HK157**

In order to meet the installation constraints of new constructions, we have created a mounting frame for the Alezio S V200 R32 range. This mounting frame, known as the Hydraulink, incorporates all the components required for the heating system. It simplifies installation and greatly reduces installation time.
Thanks to the various connection kits, it is possible to meet all left or right-hand installation configurations. Hydraulink allows pre-connection to the manifolds of the heating network. Manual drains
fitted at the factory allow you to control system drainage. If required, it is also possible to connect vertically upwards using the Hydraulink mounting frame. The 3 bar heating safety valve fitted as standard on the
Alezio S V200 R32 range can be repositioned at the top of the mounting frame using the tapping with plug.
The mounting frame is available in 1 circuit or 2 circuits, left or right.

ALEZIO S HEAT PUMP

OPTIONS

BLC 150 / BLC 200 / BLC 300



BLC_Q0001A

DHW TANKS BLC 150, 200, 300

(only for MIV-S, in combination with package EH149

- BLC 150 - REF 100018088

- BLC 200 - REF 100018089

- BLC 300 - REF 100018090

In order to optimise DHW production performance, certain combinations of tank and heat pump output are recommended. The recommended combinations are as follows:

	CAPACITY (L)	HEAT EXCHANGE SURFACE AREA (m^2)	ALEZIO S R32			ALEZIO S R410	
			4 MR	6 MR	8 MR	11 MR/TR	16 MR/TR
BLC 150	150	0.76	●	●	●	●	○
BLC 200	200	0.93	●	●	●	●	●
BLC 300	300	1.20	○	○	○	●	●

● Combination recommended ○ Combination not recommended

EH149



PAC_Q0117

DHW TANK/HEAT PUMP CONNECTION KIT BLC - REF: 100015468 / EH149

This kit includes two stainless, insulated flexible conduits, for connecting the MIV-S to the tank (not applicable for the ALEZIO S V200).

HK146



PAC_Q5006

DECOUPLING CYLINDER 25 L - REF 7746192 / HK146

The bottle is decoupling the secondary heating circuit from the MIV S primary circuit. Ideal in retrofit, especially to avoid any problem of flow with high pressure drop circuits.

HK150



PAC_Q5005

DIFFERENTIAL BY-PASS VALVE - REF 7746242 / HK150

This differential by-pass valve has to be installed on circuits equipped with thermostatic valves, in order to ensure a minimum flow rate in the MIV S.

HK152



PAC_Q5007

2ND CIRCUIT HYDRAULIC KIT V3V EXTERNAL - REF 7746307 / HK152

EH784



STRATEO_Q0036

DOMESTIC HEATING REVERSAL VALVE + DHW SENSOR REF 7685541 / EH784 (FOR ALEZIO S/E ONLY)

This kit includes a motorised reversal valve, a DHW sensor, a 2-pole connector for the DHW sensor and a 4-pole connector for the reversal valve motor. This valve enables the MIV-S to be connected to a DHW tank for domestic hot water production.
NOTES: the reversal valve and the DHW sensor are factory integrated into the MIV-S/… V200.

SPECIAL OPTIONS FOR ALEZIO S V200 MODELS



EH858

PAC_Q9115

KIT FOR 3-WAY VALVE (INTERNAL) - REF 7657050 / EH858

Kit to be installed below the enclosure of ALEZIO S V200 models. The kit contains a motorised 3-way valve, circulating pump, magnetic filter and flow sensor after the valve.

EH859



PAC_Q9117

INSULATION KIT FOR AIR-CONDITIONING MODE (WATER AT + 7°C) REF 7677244 / EH859

EH860



PAC_Q0146

LIFTING PUMP - REF 7687189 / EH860

Designed for draining the discharge from the safety valve when this is not possible using gravity.

ADDITIONAL FEATURES
OF THE **CONTROL SYSTEM**

"ESTIMATE ENERGY CONSUMPTION" FEATURE

The control system on our indoor modules includes an "Estimate energy consumption" feature. Using parameters such as the performance of the system(s) (according to the weather conditions) and the type of energy sources being used, the control system calculates the energy consumption for each operating mode (DHW, heating, cooling). This estimate is shown on the screen of the control system.

"HYBRID" FEATURE

The hybrid feature incorporated into the control system of the indoor module is used to manage solutions which combine a heat pump (partially using renewable energy) and a low-temperature boiler or condensing boiler (oil-fired or gas) which operate alone or simultaneously depending on the weather conditions and the heating requirements.
The hybrid feature serves to meet the needs of the installation by always optimising energy consumption between gas, oil and electricity, and it does so by:
• Either using the cheapest energy source (to minimise heating costs).
• Or using the one with the lowest primary energy consumption based on sustainable management.
The "energy tariff" or "primary energy co-efficient" values can be changed by adjusting the control system parameters.

This regulation mode also offers the following advantages:
• Reduction in the heat pump output to minimise electricity bills.
• Heating and DHW requirements are fully covered by the heat pump + boiler system.
• In the existing home, energy savings are higher compared to using a boiler alone, the installed boiler's CO_2 emissions are reduced, and connection is possible without changing the existing heat emitters, and no need to use a very high temperature.

PRIMARY ENERGY

Using the lighting, domestic hot water and control system involves consuming energy (oil, wood, gas, electricity). This energy that is finally consumed is not always available in the same state as in nature (e.g. electricity) and sometimes needs to be transformed. Primary energy includes the energy used to transform and transport it. Primary energy is measured using the **"primary energy co-efficient"**, which represents the amount of primary energy needed to obtain a unit of energy. In the case of electricity, the co-efficient is approximately 2.4 (*), which means that to obtain 1 kWh of electrical energy, primary energy consumption is 2.4 kWh. For natural gas and oil, the co-efficient is approximately 1.2.
(*) Electricity conventionally produced by the state

PERFORMANCE LEVELS OF A "HYBRID" SOLUTION

The graph below shows a comparison of the performance (COP) in terms of primary energy (for heating and DHW production) of various solutions:
• The hybrid solution: combination of a heat pump and a condensing boiler (renewable energy, electrical energy and energy from gas or oil).
• The solution with a heat pump alone (renewable energy with an electrical backup).
• The solution with a condensing boiler alone (energy from gas or oil).

For an outside air temperature below the tipping point, the hybrid solution improves the performance (primary energy COP) of the system compared to using a heat pump alone. Moreover, for an outside air temperature above the tipping point, the hybrid solution offers superior performance compared to using a condensing boiler alone.

COMPARISON OF THE PRIMARY ENERGY PERFORMANCE LEVELS OF AN ELECTRIC HEAT PUMP, A CONDENSING BOILER AND A HYBRID SOLUTION

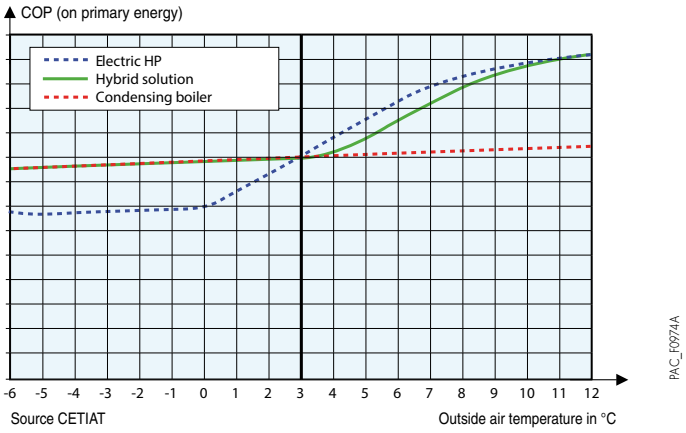

ADDITIONAL FEATURES
OF THE **CONTROL SYSTEM**

EXAMPLES OF HYBRID SOLUTIONS

EXAMPLE OF A HYBRID SOLUTION ACCORDING TO THE PRIMARY ENERGY CO-EFFICIENT

The graph opposite shows the different hybrid solutions according to the outside air temperature and the primary energy consumption.
When the COP of the heat pump > 2.5 and the $T_{air} > T_{bal}$ only the heat pump will be used. For Tstop < $T_{air} < T_{bal}$, the control system will manage the heat pump in combination with the boiler. When the COP of the heat pump < 2.5, the control system will only manage the boiler.
Therefore, for each configuration, it is the control system which decides which generator or combination of generators will be used to meet the heating and DHW requirements.
This principle of management according to primary energy is especially valid for new builds.

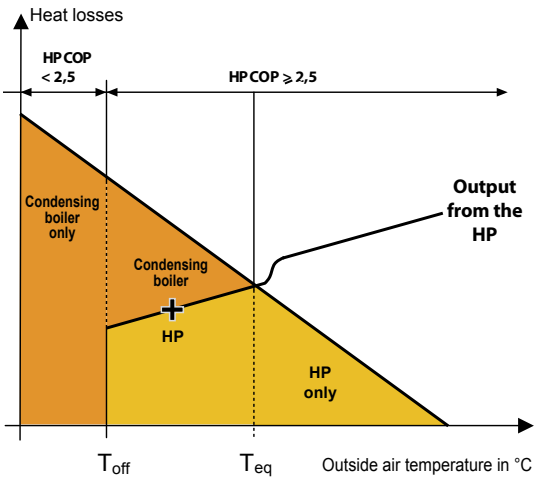

EXAMPLE OF A HYBRID SOLUTION ACCORDING TO ENERGY COSTS

The graph opposite shows the operating principle of the hybrid feature according to the outside air temperature and energy costs.

To calculate the energy cost ratio, R:

$$R = \frac{\text{Cost of electricity (€/kWh)}}{\text{Cost of gas (€/kWh)}} = \frac{0.15}{0.05} = 3$$

(the energy cost takes into account the annual tariff)
The co-efficient R (the calculated energy cost ratio) and the outside air temperature are the parameters which the control system uses to define the various operating modes. In the example opposite:
- The heat pump is a ALEZIO S 11 MR model paired with a natural-gas-fired condensing boiler.
- The generators are installed in a 130-m2 house.

When the heat pump COP > 3 and Tair > +2°C, the control system only manages the heat pump to meet the heating and DHW production requirements.
When the heat pump COP > 3 and -5°C < T_{air} < +2°C, the control system manages the heat pump in combination with the boiler. When the COP of the heat pump < 3, the control system will only manage the boiler.
Therefore, for each configuration, it is the control system which decides which generator or combination of generators will be used to meet the requirements.

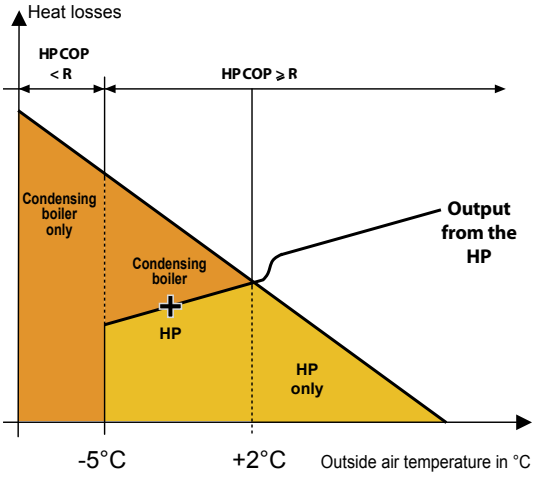

SIZING AIR-TO-WATER HEAT PUMPS

Air-to-water heat pumps alone cannot compensate for the heat losses of a home, as their output is reduced when the outside temperature drops, and they stop working at a certain temperature, known as the "stop temperature". For the ALEZIO S range, this temperature is - 20°C (- 15°C for 4.5 and 6 kW). Therefore, an electrical backup via an immersion heater or a hydraulic backup via a boiler is necessary. The balance temperature corresponds to the outside temperature at which the heat pump's output is equal to the losses.

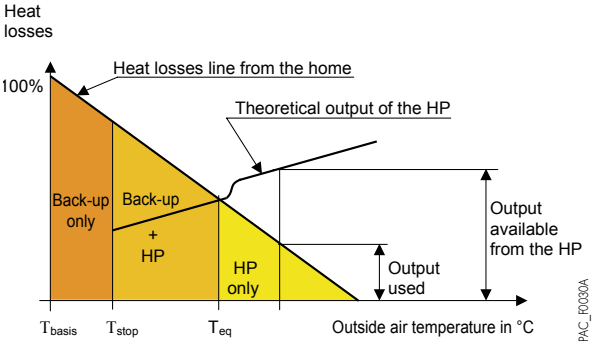

TO OPTIMISE SIZING, IT IS RECOMMENDED TO APPLY THE FOLLOWING RULES:

- 80% of losses ≤ Heat pump output at T_o ≤ 100% of losses where $T_o = T_{base}$ if $T_{stop} < T_{base}$ and T_o = stop otherwise
- Heat pump output at T_{base} + Backup power = 120% of losses

T_{base} = Base outside temperature,
T_{bal} = Balance temperature,
T_{stop} = Stop temperature (See tables on page 11).

If these sizing rules are followed, it is possible to achieve coverage rates of 80 to over 90%, depending on the case.

SIZING AN INSTALLATION
WITH A HEAT PUMP

SELECTION TABLE

• ALEZIO S MR SINGLE-PHASE MODULES FOR A FLOW TEMPERATURE AT 35°C

AT T_{BASE} °C \ LOSSES (KW)	3	4	5	6	7	8	9	10	11	12	13	14	15	16	17	18	19	20
0														16 MR + 7				
-1																	16 MR + 11	
-2									11 MR + 4		11 MR + 6		16 MR + 6	16 MR + 8	16 MR + 9	16 MR + 10		16 MR + 13
-3										11 MR + 6								
-4					4 MR+3		8 MR + 4	11 MR + 4				16 MR + 6						
-5																	16 MR + 12	
-6				4 MR+3		8 MR + 4			11 MR + 6		16 MR + 6		16 MR + 7	16 MR + 9	16 MR + 10	16 MR + 11		16 MR + 14
-7			4 MR+3							16 MR + 4		16 MR + 7	16 MR + 8				16 MR + 13	
-8									16 MR + 4							16 MR + 12		
-9	4 MR+3	4 MR+3			6 MR + 3		11 MR + 4	11 MR + 6		16 MR + 6	16 MR + 7	16 MR + 8	16 MR + 9	16 MR + 10	16 MR + 11		16 MR + 14	16 MR + 15
-10									16 MR + 6							16 MR + 13		
-11											16 MR + 8	16 MR + 9	16 MR + 10	16 MR + 11	16 MR + 12		16 MR + 15	16 MR + 16
-12										16 MR + 7						16 MR + 14		
-13											16 MR + 9	16 MR + 10	16 MR + 11	16 MR + 12	16 MR + 13		16 MR + 16	16 MR + 17
-14										16 MR + 8						16 MR + 15		
-15			6 MR + 3		8 MR + 3	11 MR + 4	16 MR + 4	16 MR + 6	16 MR + 6		16 MR + 10	16 MR + 11	16 MR + 12	16 MR + 13	16 MR + 14	16 MR + 16	16 MR + 17	16 MR + 18
-16				6 MR + 3						16 MR + 9								
-17					11 MR +4						16 MR + 11	16 MR + 12	16 MR + 13	16 MR + 14	16 MR + 15	16 MR + 17	16 MR + 18	
-18										16 MR + 10								
-19											16 MR + 12	16 MR + 13	16 MR + 14	16 MR + 15	16 MR + 16	16 MR + 18		
-20										16 MR + 11								

• ALEZIO S TR THREE-PHASE MODULES FOR A FLOW TEMPERATURE AT 35°C

AT T_{BASE} °C \ LOSSES (KW)	3	4	5	6	7	8	9	10	11	12	13	14	15	16	17	18	19	20
0																		
-1																		
-2																		
-3							-	11 TR + 3	11 TR + 6	11 TR + 6	11 TR + 6	16 TR + 6	16 TR + 6	16 TR + 9				
-4																		
-5						-												
-6																		
-7					-								16 TR + 9					
-8							11 TR + 3	11 TR + 6		16 TR + 6	16 TR + 6			-				
-9	-	-	-	-											-	-	-	-
-10						11 TR + 3												
-11							11 TR + 6		16 TR + 6		16 TR + 9	-	-					
-12								16 TR + 6		16 TR + 9	-							
-13					11 TR + 3	11 TR + 6	16 TR + 6			-								
-14																		
-15																		
-16																		
-17																		
-18																		
-19																		
-20																		

+..: minimum electrical or hydraulic backup required in kW hatched boxes: with hydraulic backup only

Notes

- The losses must be calculated accurately and without a surplus power co-efficient.
- + 2, + 4… corresponds to the minimum electrical or hydraulic backup required in kW
- The electrical backup is 9 kW max. and requires a three-phase power supply (6 kW max. for single-phase supply)
- in the case of installations with boiler replacement, it is possible to select a slightly undersized single-phase heat pump instead of a three-phase heat pump, taking into account that during a renovation it is not always possible to switch from a single-phase to a three-phase electrical cabinet.
- **At an outside temperature below the stop temperature of the heat pump (- 20°C or - 15°C) only the back-ups work.**

SIZING AN INSTALLATION
FOR **ALEZIO S HEAT PUMPS**

INSTALLING ALEZIO S HEAT PUMPS

- The outdoor units on ALEZIO S heat pumps are installed near the home, on a terrace or façade or in a garden. They are designed to work in rainy conditions, but can also be installed in a covered, well-ventilated location.
- The outdoor unit must be installed so as to be sheltered from the prevailing winds which could affect the performance of the installation.
- It is also recommended to position the unit above the average snow line of the region in which it is installed.
- The location of the outdoor unit must be chosen carefully to ensure that it is compatible with the requirements of the environment: integration in the location, compliance with regulations on town planning and joint ownership.
- There must be no obstacles impeding the free circulation of air through the heat exchanger at the suction and discharge points; it is therefore necessary to allow clearance around the appliance to enable connection, start-up and maintenance operations to be performed.

• ALEZIO S

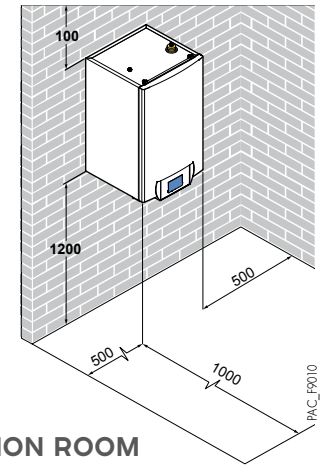

• ALEZIO S V200

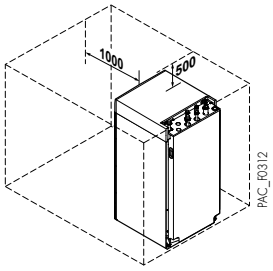

VENTILATION AND SURFACE AREA OF INSTALLATION ROOM

- The use of R32 fluid requires a minimum surface area of the installation room to be respected, depending on the length of the refrigerant pipes used.
- This surface area corresponds to the unoccupied floor area of the room (see table below):

LENGTH OF REFRIGERANT PIPE	M	10	11-19	≥ 20
MINIMUM FLOOR AREA = S	M^2	5	6	7

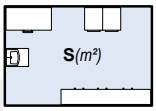

OUTDOOR MODULE: MINIMUM DISTANCES FOR INSTALLATION (mm)

- Height without brackets: AWHPR 4, 6 and 8 MR…
- Height in brackets: AWHP 11 and 16 MR/TR-2…

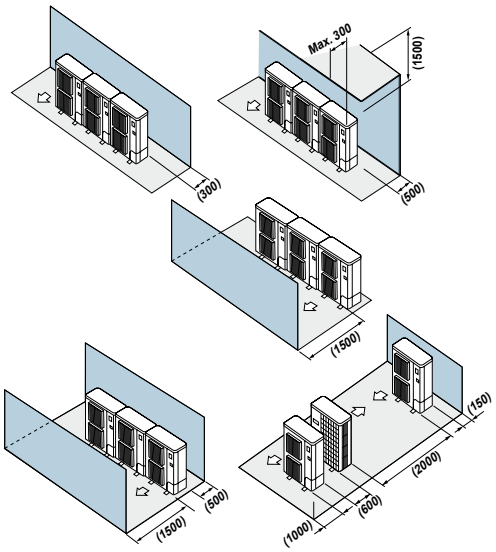

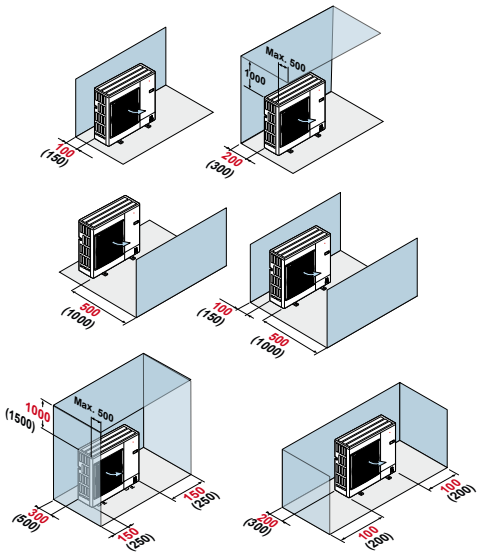

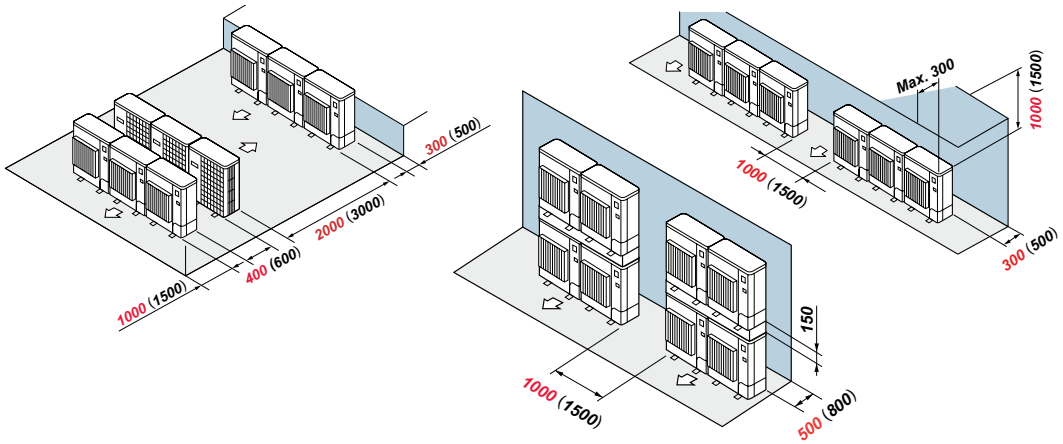

IMPORTANT INFORMATION FOR INSTALLATION

FOR **ALEZIO S HEAT PUMPS**

MAXIMUM DISTANCES FOR REFRIGERANT FLUID CHARGE

MAXIMUM CONNECTION DISTANCE (SEE DIAGRAM BELOW)

OUTDOOR UNIT	AWHPR 4 MR	AWHPR 6 MR	AWHPR 8 MR	AWHP 11 MR/TR-2 AND 16 MR/TR-2
refrigerant gas pipe Ø	1/2"	1/2"	1/2"	5/8"
refrigerant fluid pipe Ø	1/4"	1/4"	1/4"	3/8"
L (m)	5-30	5-30	5-30	2-75
B (m)	30	30	30	30

L: Minimum/maximum connection distance between the indoor module and the outdoor unit. If the distance is less than 2 m, malfunctions and noise may result.
B: Maximum permitted height difference between the indoor module and the outdoor unit.

PRECHARGE QUANTITY

If the length of the refrigerant pipe is less than 10 m, no additional refrigerant fluid charge is required. For lengths over 10 m, the following additional charges are required:

AWHP OUTDOOR UNIT MODELS	ADDITIONAL REFRIGERANT FLUID (KG) FOR A DISTANCE › 10 m					
	11 TO 20 m	21 TO 30 m	31 TO 40 m	41 TO 50 m	51 TO 60 m	61 TO 75 m
AWHPR 4 6 8	0.1	0.2	-	-	-	-
AWHP 11 and 16 MR/TR-2	0.2	0.4	1.0	1.6	2.2	2.8

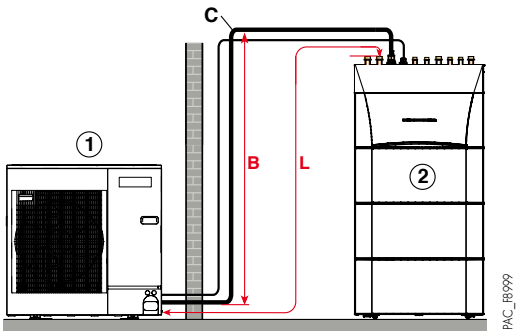

B: Max. height difference
L: Max. connection distance
C: 15 elbows max.
① Outdoor unit
② MIV-S indoor module

ACOUSTIC INTEGRATION OF ALEZIO S HEAT PUMPS

DEFINITIONS

The acoustic performance levels of the outdoor units are defined by the following two values:

- **The sound power Lw expressed in dB[A]:** this characterises the sound emission capacity of the source, independently of its environment. It enables appliances to be compared.
- **The sound pressure Lp expressed in dB[A]:** this is the value perceived by the human ear, and depends on parameters such as the distance from the source, the size and the type of walls in the building.

RECOMMENDATIONS FOR ACOUSTIC INTEGRATION OF THE OUTDOOR MODULE

- Do not position the module close to bedrooms.
- Avoid placing it close to a terrace, and do not install the module opposite a wall. The increase in the noise level due to the installation configuration is shown in the diagrams below:

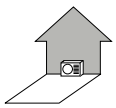

Module positioned against a wall: + 3 dB[A]

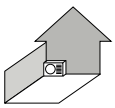

Module positioned in a corner: + 6 dB[A]

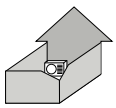

Module positioned in an inner courtyard: + 9 dB[A]

HPI_F0029

- The following configurations must not be used:

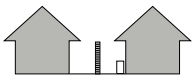

Ventilation directed towards the neighbouring property

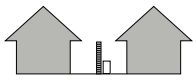

Module positioned at the boundary of the property



Module positioned under a window

HPI_F0029

- The following recommendations should be followed to reduce environmental noise and the transmission of vibrations:
  - Installing the outdoor module on a metal frame or an inertia base. This base must be at least twice as heavy as the module and be independent of the building. Anti-vibration mounts will still need to be installed to reduce the transmission of vibrations.
  - The use of suitable sleeves at the points where the refrigerant connections are routed through the walls.
  - The use of flexible, anti-vibration materials for mountings.
  - The installation of vibration-damping devices such as loops or elbows on the refrigerant connections.
- It is also recommended to install an acoustic attenuation device, for example:
  - A wall dampener fitted on the wall behind the module.
  - A sound barrier: the surface of the barrier must be larger than the outdoor module and be positioned as close as possible to it, while allowing air to circulate freely. The barrier must be made from a suitable material such as acoustic bricks or concrete blocks covered with absorbent material. It is also possible to use natural barriers, such as banks of earth.

REFRIGERANT CONNECTION

The installation of ALEZIO S heat pumps includes operations in the refrigerant circuit.
Installation, start-up, maintenance and repair of the appliances must be carried out by qualified, trained staff, in compliance with the provisions of the directives, laws and regulations in force.

IMPORTANT INFORMATION FOR INSTALLATION

FOR **ALEZIO S HEAT PUMPS**

ELECTRICAL CONNECTION

The heat pumps must be electrically installed in accordance with the current norms, decrees and legal texts associated with them.

RECOMMENDATIONS ON CABLE CROSS-SECTIONS AND CIRCUIT BREAKERS TO BE INSTALLED

HEAT PUMP ALEZIO S	TYPE	OUTDOOR UNIT					INDOOR MODULE		
		NOMINAL AMPERAGE + 7/35°C	START-UP AMPERAGE + 7/35°C	MAX. AMPERAGE	OUTDOOR UNIT POWER SUPPLY		MIV-S INDOOR MODULE POWER SUPPLY		COMMUNICATION BUS
	...PHASE	A	A	A	CS (mm^2)	CURVE C* CB	CS (mm^2)	CURVE C* CB	CS (mm^2)
4 MR	Single	4.25	5	13.9	3 x 2.5	16 A	3 x 1.5	10 A	2 x 0.75
6 MR	Single	6.57	5	13.9	3 x 2.5	16 A	3 x 1.5	10 A	2 x 0.75
8 MR	Single	8.99	5	13.9	3 x 2.5	25 A	3 x 1.5	10 A	2 x 0.75
11 MR	Single	11.41	5	29.5	3 x 6	32 A	3 x 1.5	10 A	2 x 0.75
11 TR	Three	3.8	3	13	5 x 2.5	16 A	3 x 1.5	10 A	2 x 0.75
16 MR	Single	16.17	6	29.5	3 x 10	40 A	3 x 1.5	10 A	2 x 0.75
16 TR	Three	5.39	3	13	5 x 2.5	16 A	3 x 1.5	10 A	2 x 0.75

ELECTRICAL BACKUP		
1-PH: 2, 4 or 6 kW	CS	3 x 6 mm^2
	CB	Curve C, 32 A
3-PH : 9 or 6 kW	CS	5 x 2.5 mm^2
	CB	Curve C, 16 A

KEY
CS =Cable cross-section in mm^2
CB =Circuit breaker
* Differential protection

HYDRAULIC CONNECTION

The MIV-S and MIV-S V200 indoor modules on ALEZIO S heat pumps are fully equipped for the connection of a direct circuit (radiators or underfloor heating): circulating pump with an Energy Efficiency Index (EEI < 0.23), expansion vessel, heating safety valve, manometer, automatic air vent etc.

NOTE
As ALEZIO S heat pumps are "SPLIT INVERTER" type appliances with a refrigerant connection between the outdoor unit and the MIV-S and MIV-S V200 module, it is not necessary to add glycol to the installation.

TOTAL DYNAMIC HEAD OF THE HEATING CIRCUIT

· At the outlet of the MIV-S ALEZIO S 11 and 16 MR/TR with a WILO YONOS PARA RS25/6 heating pump

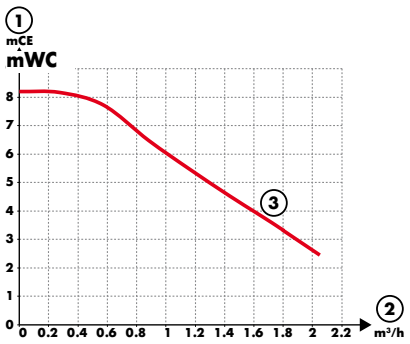

① Total dynamic head available in mWC
② Flow rate in m^3/h
③ ALEZIO S 11 and 16 MR/TR

· At the outlet of the MIV-S ALEZIO S V200 11 and 16 MR/TR

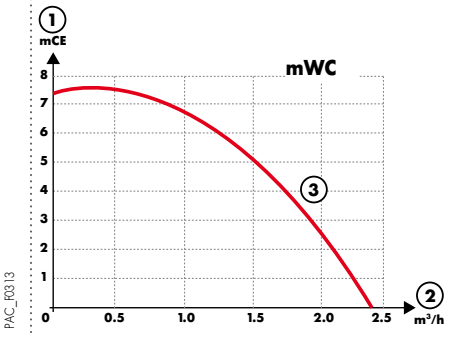

① Total dynamic head available in mWC
② Flow rate in m^3/h
③ ALEZIO S 11 and 16 MR/TR V200

· At the outlet of the MIV-S of the ALEZIO S R32 and ALEZIO S V200 R32 4/6/8 MR

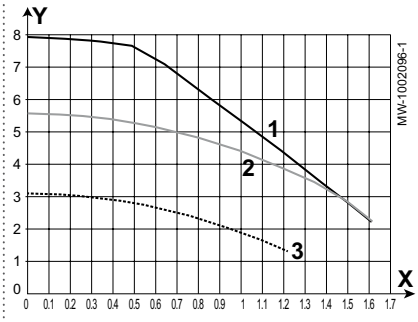

① Circulating pump speed 100%
② Circulating pump speed 80%
③ Circulating pump speed 60%
X Water flow rate (m^3/h)
Y Pressure available (mCE)

IMPORTANT INFORMATION FOR INSTALLATION

FOR **ALEZIO S HEAT PUMPS**

IMPORTANT RECOMMENDATIONS

types of emitters

ALEZIO S heat pumps are limited to a maximum flow temperature of 60°C. It is therefore essential to work with low-temperature emitters, for example underfloor heating/cooling or radiators sized for low temperatures. For cooling mode, only underfloor cooling with slabs is acceptable. It is also necessary to comply with the minimum flow temperatures according to the geographical area to avoid condensation (between 18°C and 22°C).

refrigerant gases

R410A refrigerant gas has properties suited to heat pumps. It belongs to the HFC (Hydrofluorcarbon) family comprising carbon, fluorine and hydrogen. It does not contain chlorine, and are therefore not harmful to the ozone layer.

R32 is an HFC fluid with a GWP of 675 compared to 2088 for R410A
- R32 is a pure fluid and therefore easier to recover and recycle.

According to local regulation a certificate of competence could be required
- Additional equipment is required: specific recovery cylinder, leak detector suitable for flammable refrigerants, pressure gauge with dedicated scale, recovery station suitable for flammable refrigerants, adapter for the cylinder and a ventilation system.
- R32 has a low GWP to ensure a transition to more environmentally friendly solutions.

cooling or air conditioning mode

Reversible heat pumps can be used for cooling in summer. A 4-way valve, known as a cycle reversal valve, switches the cycle from heating to cooling mode.
The compressor suction is thus connected to the internal exchanger, which becomes an evaporator. The compressor return is thus connected to the external exchanger which becomes a condenser.

NOTE: For air-to-water type heat pumps, this 4-way valve is also used for the evaporator defrosting phase.

For an installation with underfloor heating/cooling (water flow/return temp.: + 18°C/+ 23°C), the cooling output is limited but sufficient to maintain comfortable conditions in the home. This enables the average room temperature to be reduced by 3-4°C.

SIZING THE STORAGE TANK

- The volume of water in the heating system must be able to store all the energy supplied by the heat pump during its minimum operating period.
- Consequently, the volume of the tank corresponds to the minimum water volume required after the network capacity is subtracted from it.
- It is recommended to install a buffer tank for installations where the water volume is less than 5 l/kW of the heat pump's heat output (take into account the 2.1-litre volume of the MIV-S).
- Increasing the volume in an installation limits compressor short-cycle operation (the higher the water volume, the fewer compressor start-ups will be required, thus extending its service life).
- In the first instance, below is an estimate of the buffer volume for a minimum operation time of 6 minutes, a control differential of 5 K and a negligible network volume (take into account the 2.1-litre volume of the MIV-S).
- The buffer tank should be installed on the heating circuit return. If there are 2 heating circuits, the buffer tank should be installed on the return of the circuit with the lowest water volume.

ALEZIO S	4 MR	6 MR	8 MR	11 MR and 11 TR	16 MR and 16 TR
Buffer volume (litres)	23	30	40	57	73

To guarantee the best performance from the heat pumps for optimised comfort and to maximise their service life, they must be installed, commissioned and maintained with care by following the instructions in the manuals provided with the appliance.
De Dietrich strongly recommend that you sign a maintenance contract.

INSTALLATION EXAMPLES

ALEZIO S

The installation examples shown below cannot include all of the possible scenarios that may be encountered. These examples are provided as a guide for the basic concepts. A certain number of safety and control components are shown, but the planners and regulatory authorities are ultimately responsible for deciding which safety and control components should be provided, based on individual requirements, and always in compliance with current standards and legislation.

ALEZIO S 6 MR EM HEAT PUMP WITH MIV-S/E INDOOR MODULE, WITH ELECTRICAL BACKUP

- 1 direct "underfloor heating" circuit
- cooling mode possible

System



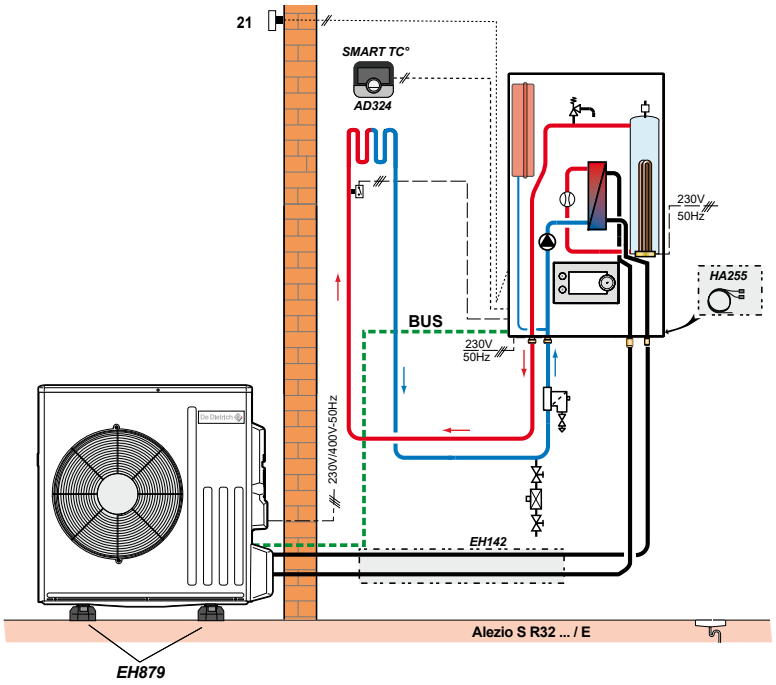

PAC_FB102

ALEZIO S 11 MR/H HEAT PUMP WITH MIV-S/H INDOOR MODULE, WITH BACKUP VIA BOILER

- 1 "radiators" direct circuit
- DHW production via boiler

System

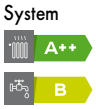

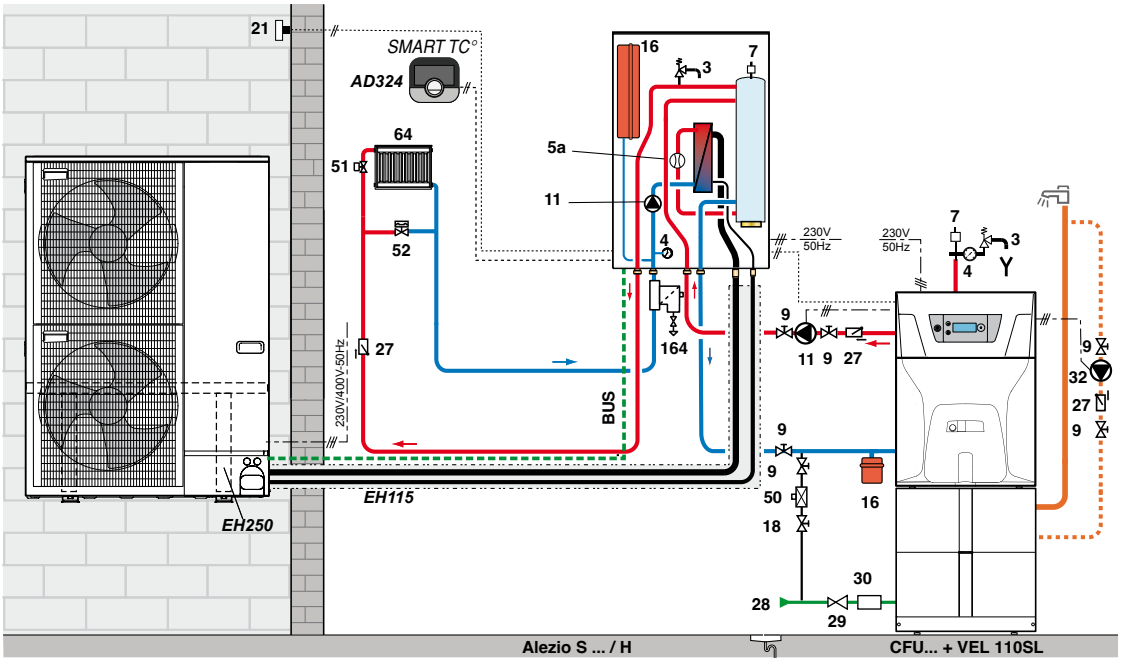

PAC_F0232

KEY: see page 28

INSTALLATION EXAMPLES

ALEZIO S

ALEZIO S 8 MR/E V200 HEAT PUMP, WITH ELECTRICAL BACKUP IN A NEW INSTALLATION

- 1 radiators direct circuit
- 1 underfloor heating/cooling circuit with mixing valve

System

A+++

A

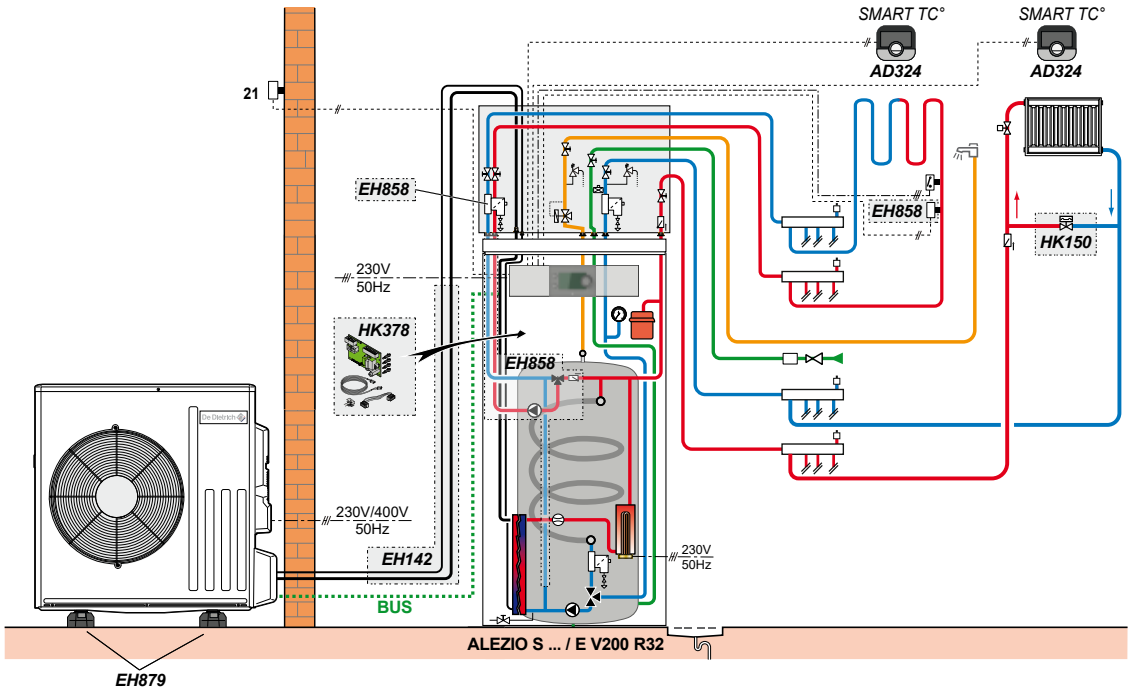

PAC_F2022

KEY: see page 28

KEY:

3	3-bar safety valve
4	Manometer
5a	Flowmeter
7	Automatic air vent
9	Shut-off valve
11	Heating pump
16	Expansion vessel
18	Filling system
21	Outdoor temperature sensor
27	Non-return valve
28	Domestic cold water inlet
29	Pressure reducer
30	Safety unit calibrated and sealed to 7 bar
44	65°C safety thermostat with manual reset for underfloor heating
50	Disconnector
51	Radiator key
52	Differential valve
64	Direct heating circuit: radiators
65	Direct heating circuit: underfloor heating
81	Immersion heater
87	Safety valve calibrated to 6 bar
117	Heating/DHW reversal valve
164	Magnetic filter

De Dietrich

BDR THERMEA France
S.A.S. With corporate capital of 229 288 696 €
57, rue de la Gare - F - 67580 Mertzwiller
Tel: +33 388 80 27 00 / Fax: +33 388 80 27 99
www.dedietrich-heating.com

09/2024 – DCDDEX000012 – 347.555.559 R.C.S Strasbourg – Non-contractual document. - PARMENTIER IMPRIMEURS - F-67 La Wantzenau