GT 220

CAST IRON FLOOR-STANDING FUEL OIL-/GAS-FIRED BOILERS

- GT 220: for hot water central heating only
- GT 2200: for hot water central heating and domestic hot water production with a 160- or 250-litre calorifier under the boiler



GT 220



GT 2200



GT 220
for heating only



GT 2200
for heating and domestic hot water production



Oil-/Gas

CE identification No:
1312BR4657

The GT 220s are low temperature cast iron boilers, with an useful output of 40 to 100 kW and high combustion efficiency (up to 94.7%) with a sealed pressurised combustion chamber to be fitted with a pressure jet fuel oil- or gas burner.
They are available with various control panels and are all factory fitted with domestic hot water priority (except X-Panel) and can be used to control 1-stage burners (B, D control panels), 2-stage burners (B2) or modulating burners (DIEMATIC 3 control panel + AD217 PCB):
The GT 2200s can be delivered with the choice of a high performance 160- or 250-litre DHW calorifier, fitted with a "Titan Active System®" anode with self-adapting current for the maintenance-free protection of the tank.

Conditions of use

Boiler:

Max. operating temperature: 100°C
Max. operating pressure: 4 bars
Thermostat adjustable from 30 to 90°C
Safety thermostat: 110°C

Domestic hot water calorifier:

Max. operating temperature: 70°C
Max. operating pressure: 10 bars
Max. usable pressure: 7 bars

De Dietrich

PRESENTATION

Strong points

The **GT 220** is a low temperature, cast iron boiler with an output of 50 to 100 kW, high combustion efficiency (up to 94.7%), with a pressurised combustion chamber to be fitted with an oil or gas burner:

- Heating body in eutectic cast iron, which is highly resistant to corrosion, for low temperature operation modulated to 30°C.
- Body design with 3-path flue gas evacuation providing advantageous acoustic properties, with a large combustion chamber to enable perfect adaptation to all types of burner, flue ways with fins including baffle plates for optimum heat exchange, available in separate sections for adaptation to boiler rooms with difficult access.
- Burner and sweeping doors mounted on reversible hinges.
- Enhanced, 100 mm thick glass wool insulation.
- Available with various control panels, all of which can be used to control 2-stage or modulating burners: see pages 8 to 12.
- The **GT 2200** is equipped with a 160 or 250 litre calorifier placed under the boiler for DHW production, fitted with a "Titan Active System®" anode with self-adapting current for the maintenance-free protection of the tank.

MODELS

Model		Output		Control panel				
								
				X	B (Basic)	D (DIEMATIC 3)	B2 (Base 2)	D + AD217 (DIEMATIC 3 + PCB AD217)
				for controlling 1-stage burner			for controlling burner	
		in kW	in Mcal/h				2-stage	2-stage or modulating
 GT 220_Q0003	**GT 220** For heating only	40-50	34.4-43.0	GT 224 X	GT 224 B	GT 224 D	-	-
		50-64	43.0-55.0	GT 225 X	GT 225 B	GT 225 D	-	-
		64-78	55.0-67.0	GT 226 X	GT 226 B	GT 226 D	GT 226 B2	GT 226 D + AD217
		78-92	67.0-79.0	GT 227 X	GT 227 B	GT 227 D	GT 227 B2	GT 227 D + AD217
		92-100	79.0-86.0	GT 228 X	GT 228 B	GT 228 D	GT 228 B2	GT 228 D + AD217
 GT 220_Q0004	**GT 2200** For heating and DHW production by L 160 (160 l) or L 250 calorifier (250 l) placed horizontally under the boiler	40-50	34.4-43.0	-	GT 2204 B/L 160	GT 2204 D/L 160	-	-
		50-64	43.0-55.0	-	GT 2205 B/L 160	GT 2205 D/L 160	-	-
		40-50	34.4-43.0	-	GT 2204 B/L 250	GT 2204 D/L 250	-	-
		50-64	43.0-55.0	-	GT 2205 B/L 250	GT 2205 D/L 250	-	-

TECHNICAL SPECIFICATIONS

Main dimensions (in mm and inches)

⇨ GT 220

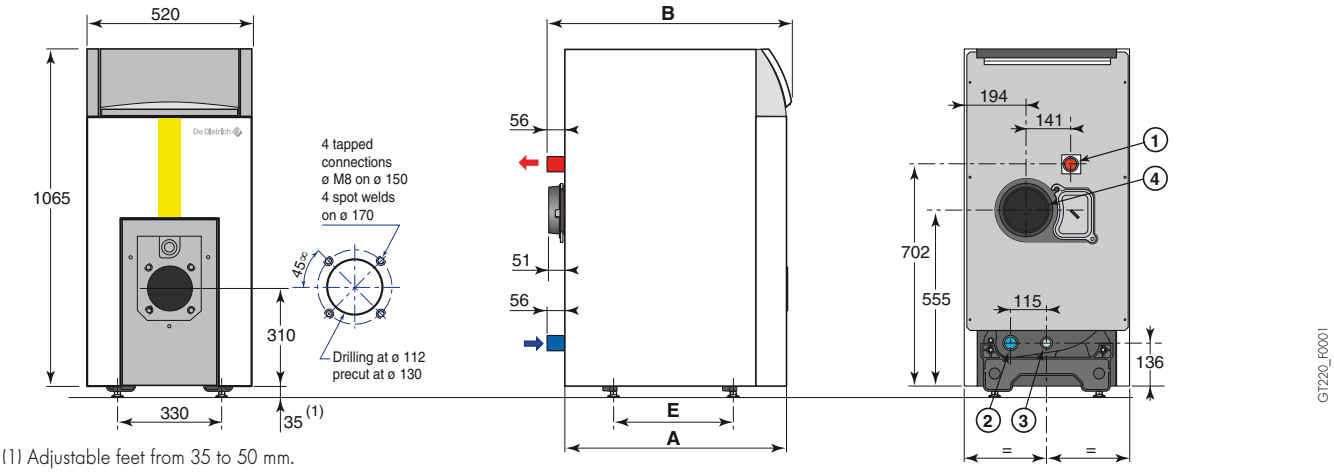

(1) Adjustable feet from 35 to 50 mm.

Model	A	B	Ø C	① ②	E
GT 224	700	772	153	R 1" 1/4	380
GT 225	827	899	153	R 1" 1/4	507
GT 226	954	1026	180	R 1" 1/2	634
GT 227	1081	1153	180	R 1" 1/2	761
GT 228	1208	1280	180	R 1" 1/2	888

⇨ GT 2200

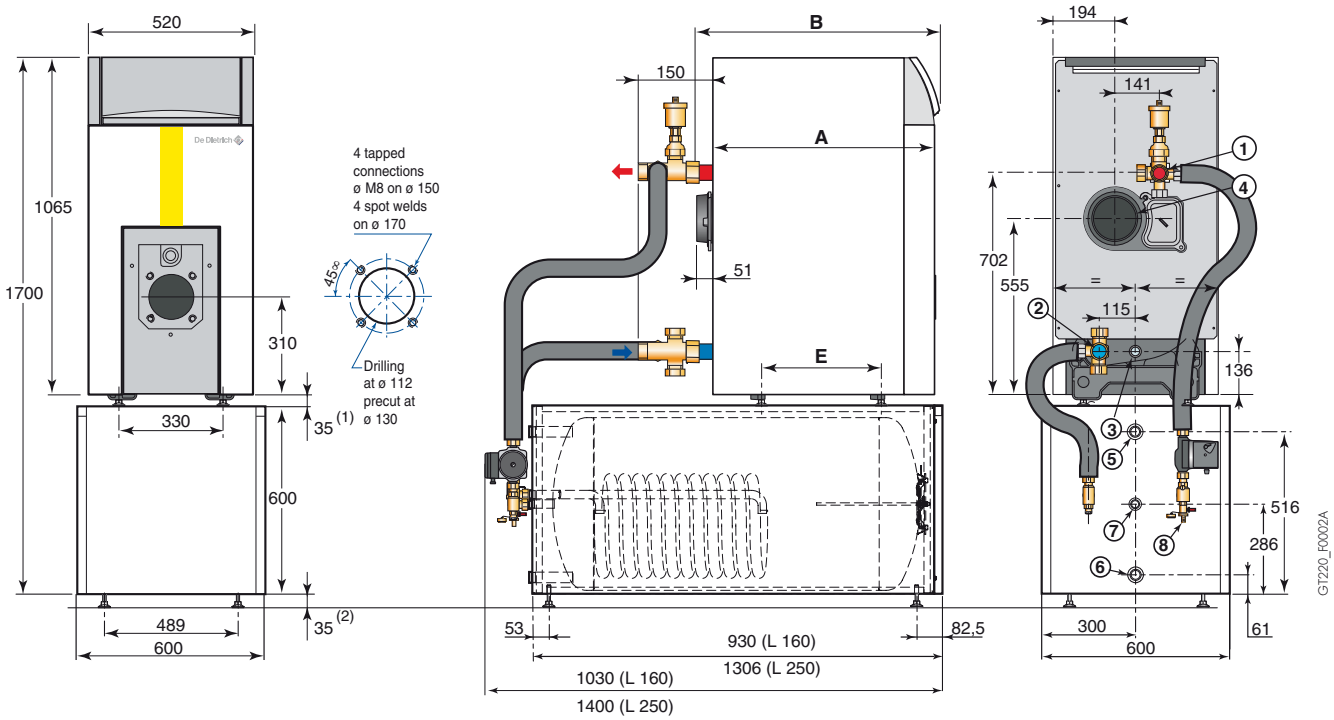

Model	A	B	Ø C	① ②	E
GT 2204/L 160, GT 2204/L 250	700	772	153	R 1" 1/2	380
GT 2205/L 160, GT 2205/L 250	827	899	153	R 1" 1/2	507

① Heating flow
② Heating return
③ Drainage and filling hole Rp 3/4"
④ Flue gas nozzle Ø C
⑤ DHW outlet G 1"
⑥ DCW inlet G 1"
⑦ DHW circulation loop return G 3/4" (optional)
⑧ Drainage and filling valve - connection for pipe int. Ø 14 mm

(2) Adjustable feet: basic height 35 mm, adjustment range 35 to 50 mm

R = Threading
Rp = Tapped connection
G = Cylindrical external thread (water tightness by flat gasket)

TECHNICAL SPECIFICATIONS

Boiler specifications

Model		GT	224 2204	225 2205	226	227	228
Nominal output		kW	50	64	78	92	100
Efficiency at … % output and … °C average temp.	- 100% at 70°C	%	91.7	91.8	92.0	91.9	91.8
	- 30% at 40°C	%	94.1	94.3	94.6	94.6	94.7
Water flow at Δt = 20 K		m^3/h	2.151	2.754	3.356	3.959	4.303
Standing losses at Δt = 30 K		W	118	139	160	181	202
Electrical power (without pump) with DIEMATIC 3 control panel		W	10	10	10	10	10
Useful output range		kW	40-50	50-64	64-78	78-92	92-100
Water content		L	36	43	50	57	64
Water resistance at Δt = 20 K		mbar	6.2	10.0	14.9	20.7	24.3
Flue gas circuit volume		L	54	68	83	97	111
Combustion chamber	- inscribed Ø /depth	mm	309/446	309/573	309/700	309/827	309/954
	- volume	L	33	42	51	60	69
Flue gas mass flow rate	- domestic fuel oil	kg/h	83	106	129	152	166
	- natural gas	kg/h	91	117	143	168	183
Combustion chamber pressure		mbar	0.2-0.5	0.3-0.6	0.3-0.8	0.4-0.8	0.6-0.9
Net weight	GT 220	kg	218	257	297	336	375
	GT 2200/L 160-250	kg	318-348	357-387	-	-	-

Values at nominal output and CO_2 = 13% with domestic fuel oil and 9.5% with natural gas, draught at the nozzle = 0 mbar

Domestic hot water production specifications (GT 2200)

Model	GT	2204/L 160	2204/L 250	2205/L 160	2205/L 250
DHW calorifier capacity	L	155	240	155	240
Exchanged power	kW	28	36	28	36
Specific rate at Δt = 30 K (compliance with EN 13203-1)	L/min	20.5	30	20.5	30
Flow per hour at Δt = 35 K	L/h	690	885	690	885
Flow over 10 min at Δt = 30 K	L/10 min	255	385	255	385
Auxiliary electrical power in DHW mode	W	80	80	80	80

DHW performances at ambient air temp. at nominal output: 20°C, cold water temp.: 10°C, primary hot water temp.: 80°C, DHW storage temp.: 60°C

X CONTROL PANEL

The X-control panel which can only be fitted to GT 224 to GT 228 boilers, for heating only, includes the control and safety devices used to operate the installation by regulating the temperature with the boiler thermostat.

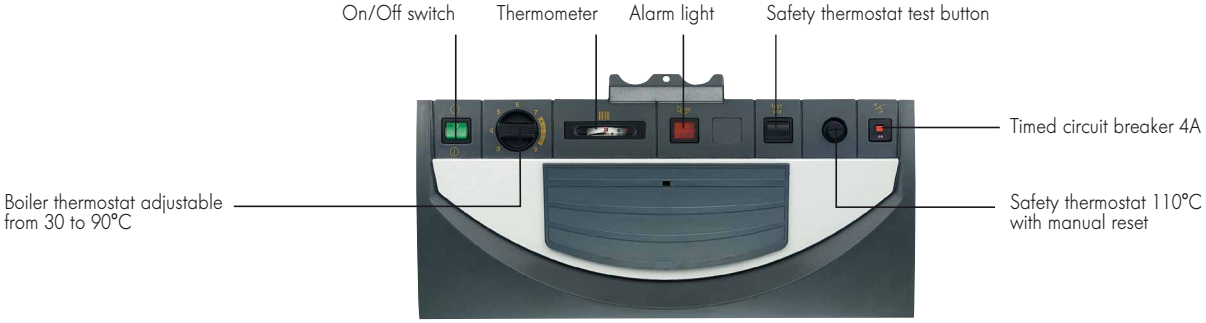

8575Q044

B AND B2 CONTROL PANELS

The B control panel, which can be fitted to all boilers in the GT 220 range, is used to control **1-stage burners** and includes the control and safety devices used to operate the installation by regulating the temperature with the boiler thermostat. It is factory fitted with domestic hot water production priority: DHW sensor delivered as standard with GT 2200 versions or delivered as an option (package AD212) for GT 220s connected to an independent DHW calorifier. 3 room temperature thermostats can also be delivered as options; when the B control panel is used with 2 room temperature thermostats, it can control 2 direct circuits.

The B2 control panel, which can be fitted to GT 226 to 228 boilers, operates according to the same principle as the B control panel but is adapted for use with boilers fitted with a **2-stage burner.** A room temperature thermostat (optional) can be added to control 1 direct circuit.

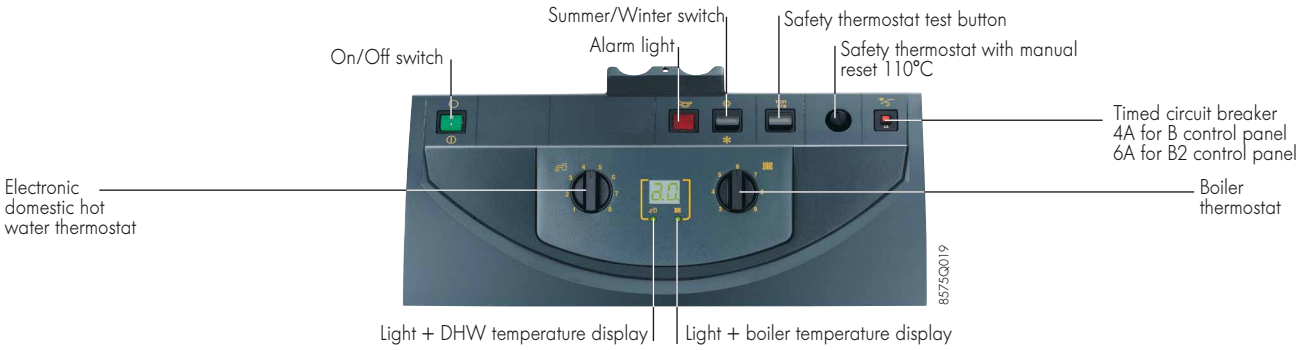

B AND B2 CONTROL PANELS OPTIONS


8518Q022

Domestic hot water sensor (length 5 m) - Package AD212

This is used to regulate the boiler with domestic hot water temperature priority.
It is fitted as standard to the GT 2200. The connector provided is used to deactivate the Titan Active System® function if a DHW calorifier with magnesium anode protection is connected.


8801Q002

Programmable wire-controlled room thermostat - Package AD137

This thermostat handles the regulation and weekly programming of heating by activating the burner and in accordance with the following 3 modes of operation:
- **Automatic:** according to programming (4 programmes to choose from), automatically switches the installation to "comfort" or "low" mode. The comfort and low temperatures can be adjusted between 5 and 30°C.
- **Permanent:** maintains the desired temperature all the time (between 5 and 30°C).
- **Holidays:** intended for long absences, maintains the desired temperature (between 5 and 30°C) for a predetermined duration (1 to 99 days).

The programmable thermostats AD137/AD200 are equipped with: a telephone remote control, a selection of the installation type (heating or air conditioning) and a selection of the adjustment mode (On/Off or proportional).


8666Q120A

Programmable wireless room thermostat - Package AD200

This radio transmission thermostat handles the regulation and weekly programming of heating by activating the burner and according to the same modes of operation as the programmable room thermostat in package AD247. It is delivered with a receiver box to be affixed to the wall close to the boiler.


8801Q003

Non-programmable room thermostat - Package AD140

This room thermostat is used to regulate the room temperature between 6 and 30°C by activating the burner.

DIEMATIC 3 CONTROL PANEL

The DIEMATIC 3 control panel is a very advanced control panel, which includes electronic programmable regulation to modulate the boiler temperature by activating the **1-stage burner** according to the outside temperature and also to the room temperature, if a CDI D. iSystem or CDR D. iSystem interactive remote control (optional) is connected.
DIEMATIC 3 control panel is capable of automatically operating a central heating installation with a direct circuit without mixing valve (which can even be configured as a swimming pool circuit).
Connection of a domestic hot water sensor (delivered as standard with the GT 2200) enables the programming and regulation of a DHW circuit by activating a control unit on the load pump; DHW circulation loop can be handled thanks to an auxiliary contact which includes its own programming.
The addition of 1 or 2 "PCB + sensor for a valve circuit" options (package FM48) enables the regulation of 1 or 2 circuits with mixing valve: a CDI D. iSystem, CDR D. iSystem or a simplified remote control for each of these circuits can also be delivered as optional equipment.
The connection of other additional circuits is also possible using DIEMATIC VM iSystem control units.
DIEMATIC 3 control panel also provides antifreeze protection for the heating system water if the owner is absent (absence programmable up to 1 year in advance for a period of up to 99 days).
Moreover, in larger installations, it is possible to connect up to **10 boilers in cascade** with the DIEMATIC 3 control panel + AD217 PCB, each boiler can be equipped with 1 or 2 "PCB + sensors for 1 valve circuit" options: to do so, simply connect them to each other using a BUS cable.

Control panel

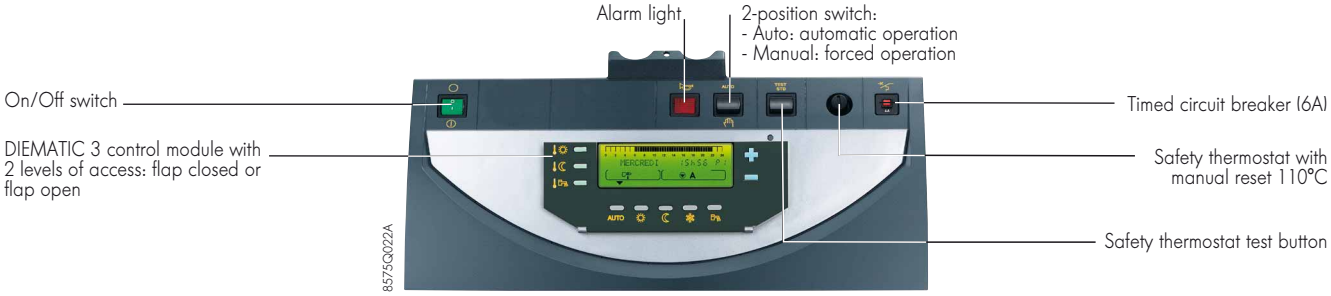

DIEMATIC 3 control module, flap closed

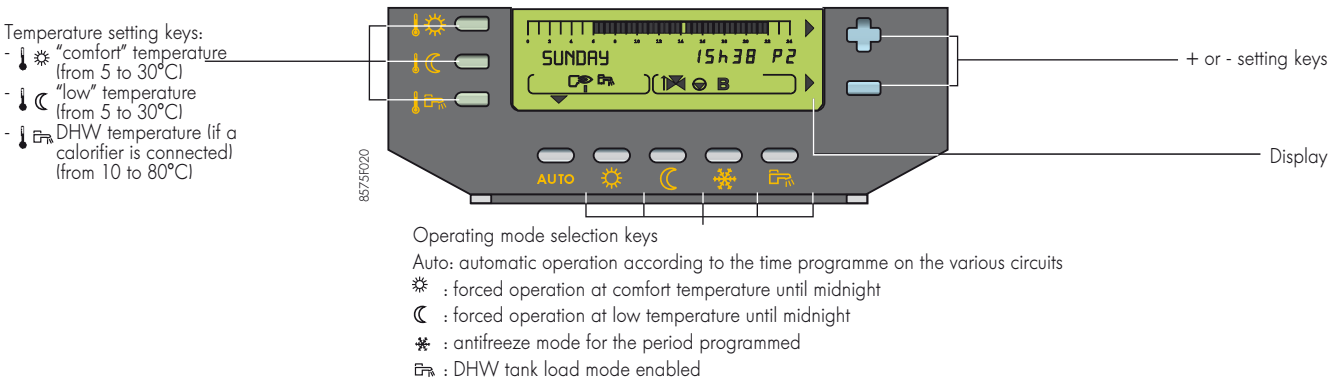

Operating mode selection keys
Auto: automatic operation according to the time programme on the various circuits
☼ : forced operation at comfort temperature until midnight
☾ : forced operation at low temperature until midnight
❄ : antifreeze mode for the period programmed
: DHW tank load mode enabled

DIEMATIC 3 control module, flap open

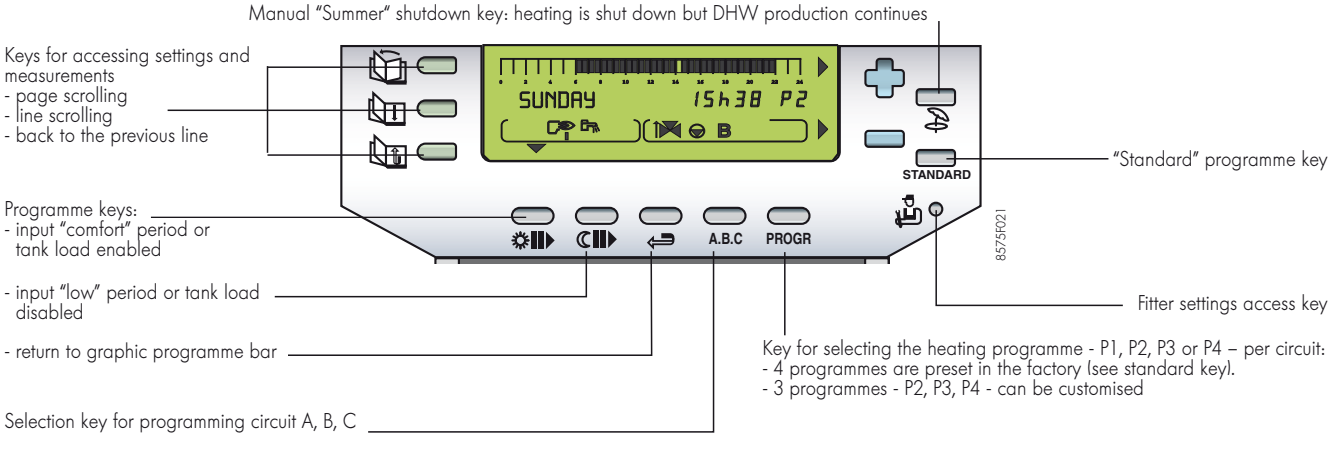

DIEMATIC 3 CONTROL PANEL + AD217

DIEMATIC 3 CONTROL PANEL WITH THE ADDITION OF PACKAGE AD217: "2 STAGE/MODULATING/3WV" PCB

With the addition of the "2 stage/modulating/3WV" PCB – package AD217 – the DIEMATIC 3 control panel can be adapted to GT 220 boilers fitted with a **2-stage burner or a modulating burner.** Apart from controlling this burner, this PCB includes as standard the control and programme for 1 circuit with mixing valve: to do so, simply connect it to an outlet sensor – package AD199 (optional).

In an installation with a second valve circuit, the DIEMATIC control panel can be further complemented with a "PCB + sensor for 1 mixing valve" – package FM48 (optional) – in addition to the AD217 PCB.
In a cascade installation with up to 10 boilers, DIEMATIC 3 control panels + AD217 can be used to control injection pumps and gate valves.

DIEMATIC 3 CONTROL PANEL OPTIONS



8518Q022

Domestic hot water sensor (length 5 m) - Package AD212

This is used to regulate the boiler with domestic hot water temperature priority.
It is fitted as standard to the GT 2200.

The connector provided is used to deactivate the Titan Active System® function if a DHW calorifier with magnesium anode protection is connected.



8575Q036

PCB + sensor for 1 mixing valve - Package FM48

This is used to control a mixing valve with a two-direction electrothermal or electromechanical motor. The valve circuit and its circulating pump can be programmed independently.

Note: DIEMATIC 3 control panels can be fitted with 1 or 2 PCB + sensor options for 1 mixing valve.


GT220_Q0001

2 stage/modulating/3WV PCB - Package AD217

This PCB is used to control a GT 220 D boiler fitted with a 2-stage or modulating burner. It is delivered as standard with GT 220 D boilers + AD217.
It also includes control and programming of a circuit with a 3-way mixing valve; the outlet sensor downstream of the valve (package AD199) must be ordered separately, however.



GT220_Q0002

Outlet sensor downstream of the valve (length 2.5 m) - Package AD199

This sensor is required if using the "2 stage/modulating/3Wayvalve PCB" for controlling a circuit with mixing valve.



CALENTA_Q0005
8666Q172A

CDI D. iSystem interactive remote control (wire) - Package AD285
CDR D. iSystem interactive "radio" remote control (without transmitter/receiver radio) - Package AD284
Radio boiler module DIEMATIC iSystem (transmitter/receiver) - Package AD252

These are used to override all instructions from the DIEMATIC 3 control panel from the room in which they are installed. In addition, they enable the self-adaptability of the heating regime for the circuit concerned (one CDI D. or CDR D. iSystem per circuit).
In the case of the CDR D. iSystem, the data are transmitted by radio waves from the place where the CDR D. iSystem is installed to the transmitter/receiver box placed close to the boiler.



8575Q034

Radio outside temperature sensor - Package AD251
Boiler radio module (radio transmitter) - Package AD252

The radio outside temperature sensor can be delivered as optional equipment for systems in which the installation of the external wire connection sensor delivered with DIEMATIC 3 control panel would be too complex. If this sensor is used :

- With a wire connection remote control (AD285 or FM52), it is necessary to order the "Boiler radio module" as well
- With a radio remote control (AD284) already equipped with a radio module, ordering a second "Boiler radio module" is not necessary .

DIEMATIC 3 CONTROL PANELS

DIEMATIC 3 CONTROL PANEL OPTIONS



BUS connecting cable (length 12 m) - Package AD134

It is used to make the connection between 2 boilers fitted with the DIEMATIC 3 control panel in a cascade installation, or to connect a DIEMATIC VM iSystem control unit.



Sensors for buffer tank (length 2 x 5,0 m) - Package AD160

Includes 1 DHW sensor and 1 heating sensor for managing a buffer tank with a boiler fitted with a DIEMATIC 3 control panel.



Simplified remote control with room sensor - Package FM52

The connection of a simplified remote control is used to override certain instructions from the DIEMATIC 3 control panel from the room in which it is installed: programme override (permanent comfort or low) and set room temperature override (± 3.5°C). It is also used to enable the self-adaptability of the heating curve for the circuit concerned (1 remote control per circuit).

BOILER OPTIONS


8801Q018

Dip sensor with tube - Package AD218

This dip sensor (NTC 147) is delivered with an IP 54 junction box and a 1/2" sensor tube, length under head 120 mm. It is used instead of the attachable sensors provided with the PCB and valve options.

It can also be used on the header pipe when connecting 2 boilers in cascade.

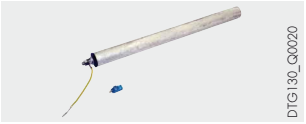
DTG130_Q0020

Protective magnesium anode - Package EA103

For DHW calorifiers on GT 2200/L… models if the "Titan Active System®" self-adapting current anode

fitted as standard is not permanently activated (in secondary homes, for example).


DTG130_Q0021

G and R connector kit (1" and 3/4") - Package BH84

This kit includes 2 x G 1"-R 1" connections and 1 x G 3/4"-R 3/4" connection with seals and enables the passage of flat seal connections into

conical connections on GT 2200 160- and 250-litre DHW calorifiers.


8575Q038

2400 W electrical resistance kit - Package BH76

The GT 2200 L 160 or L 250 DHW calorifier can be fitted with an optional electrical resistance. This resistance is composed of an Incoloy heating element and is fitted with a regulating thermostat and a safety thermostat. It is affixed to a flange fitted instead of the existing flange.

Note: in this case, the tank is protected by the magnesium anode fitted to the flange which includes the resistance.

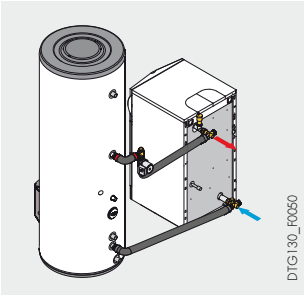
DTG130_F0050

"BPB/BLC… DHW calorifier/boiler" connection kit:
- Package EA117: for GT 224, GT 225
- Package EA118: for GT 226 to 228

As a general rule, the DHW calorifier can be placed to the right or left of the boiler according to the details given in the technical instructions for the boiler. The connection kits include an air vent, a non-return valve, a load pump and all the pipes required to make the connection.

Note: The hydraulic specifications of the load pumps provided with these connection kits make it possible to reach primary flow values of between 2 and 3 m^3/h depending on the pressure drop in the boiler connected to the DHW calorifier.

M 100/3 S



M 200 X



G 200 N


8802Q0069

OEX_Q0001

8802Q008A

Fuel oil or gas burner

De Dietrich new generation fuel oil or gas burners are compact, silent, especially designed to obtain optimum performance in combination with each

De Dietrich boiler in the GT 220 range to which they are fitted: high efficiency and combustion quality.

Fuel oil burner type		Low NOx burner (NOx < 120 mg/kWh)					
		M 100/3 S 1 stage	M 201-4 X 1 stage	M 201-7 X 1 stage	M 201/2 S 2 stages	M 201-11 X 1 stage	M 202/2 S 2 stages
Output range	kW	29-65	19-52	37-82	60-124	70-126	55*/80/125
For boilers		GT 224/2204		GT 224/2204 GT 225/2205	GT 226, GT 227, GT 228 GT 225/2205		GT 226 GT 227 GT 228 (1)

Gas burner type		Low NOx burner (NOx < 80 mg/kWh)	Eco NOx burner (NOx < 70 mg/kWh)	
		G 200/1 S 1 stage	G 201/2 N 1 stage	G 203/2 N modulating
Output range	kW	38-79	63-120	50-123
For boilers		GT 224/2204, GT 225/2205	GT 226, GT 227, GT 228	GT 226, GT 227, GT 228 (1)

* Min. 1 stage output
(1) GT 226, 227, 228 fitted with B2 and DIEMATIC 3 control panels + AD217 only

INFORMATION REQUIRED FOR INSTALLATION

Installation in boiler rooms

The figures shown in red are the minimum recommended dimensions (in metres) to guarantee easy access around the boiler.

GT 220

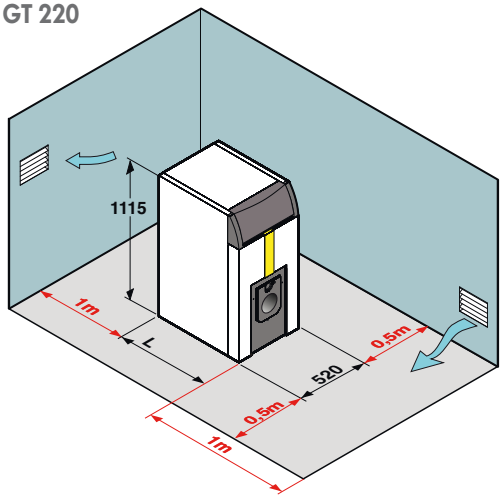

GT220_F0008

GT 2200

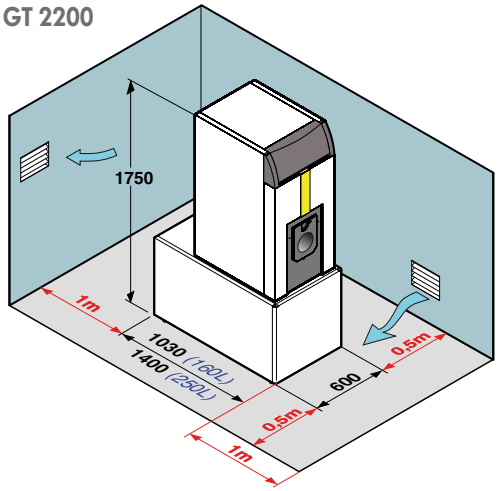

GT220_F0009

GT	224	225	226	227	228
L (mm)	700	827	954	1081	1208

Ventilation of the boiler room

This must comply with the prevailing national regulations.
The location of air inlets in relation to the high ventilation openings must ensure that air is renewed in the entire volume of the boiler room.

In order to avoid damage to boilers, it is necessary to prevent the contamination of combustion air by chloride and/or fluoride compounds, which are particularly corrosive.
These compounds are present, for example, in aerosol spray cans, paints, solvents, cleaning products, washing powders/liquids, detergents, glues, snow clearing salts, etc.
It is therefore necessary:

- To avoid sucking in air discharged from premises using such products: hairdressers, dry cleaners, industrial premises (solvents), premises containing refrigeration systems (risk of leaking refrigeration fluid), etc.
- To avoid the storage of such products close to boilers.

Please note that, if the boiler and/or its peripherals become corroded by chloride and/or fluoride compounds, our contractual warranty cannot be invoked.

Connection to a chimney

The high performances of modern boilers and their use under specific conditions related to changes to burner technologies (for example, operation at modulated low temperature) result in very low flue gas temperatures.
This requires:
1- The use of chimney flues designed to enable the flow of condensates, which may result from such operating modes, in order to prevent the risk of damage to the chimney.
2- The installation of a bleeding T at the foot of the chimney.
The use of a draught moderator is also recommended.

The table below contains the minimum dimensions of the flue required for each model of boiler to ensure sufficient draught at the nozzle. However, care must be taken to comply with any applicable national or local regulations.

Connection to the chimney:
The cross section of the pipe used to connect the boiler nozzle to the flue must be at least equal to that of the nozzle and the conduit must be as direct and as short as possible.

Boiler GT		224	225	226	227	228
Combustion chamber pressure*	mbar	0.2-0.5	0.3-0.6	0.3-0.7	0.4-0.8	0.6-0.9
Chimney	Ø(mm)	150	150	180	180	180
	min. height (m)	5	5	5	5	5

* for a draught at the nozzle = 0 mbar

EXAMPLES OF INSTALLATIONS

The examples presented below cannot cover the full range of installation scenarios. Their purpose is to draw the attention to the basic rules to be followed.
A certain number of control and safety devices are represented but, in the last resort, it is up to the experts, consultant engineers and design departments to make the final decision on the control and safety devices to be used in the boiler room.

In all events, it is necessary to abide by the codes of practice and the local and national regulations in force.
Attention: For the connection of domestic hot water, a sleeve made of steel, cast iron or any other insulating material must be interposed between the hot water outlet and this pipework to prevent any corrosion to the spot welds, if the distribution pipework is made of copper.

Installation of GT 2200 with 1 direct circuit

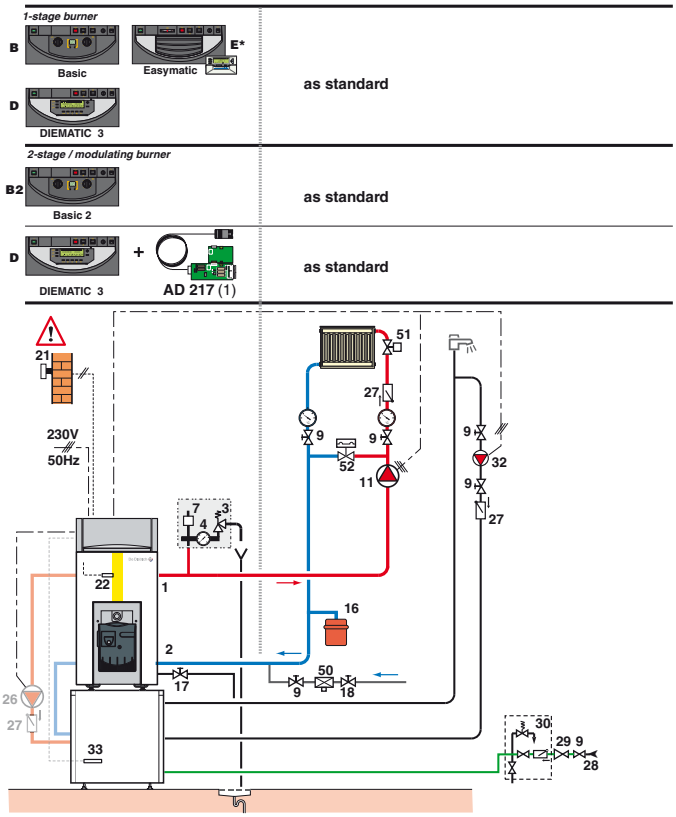

Installation of GT 220 with 1 direct circuit + 1 circuit with mixing valve; domestic hot water production using the DIETRISOL solar system

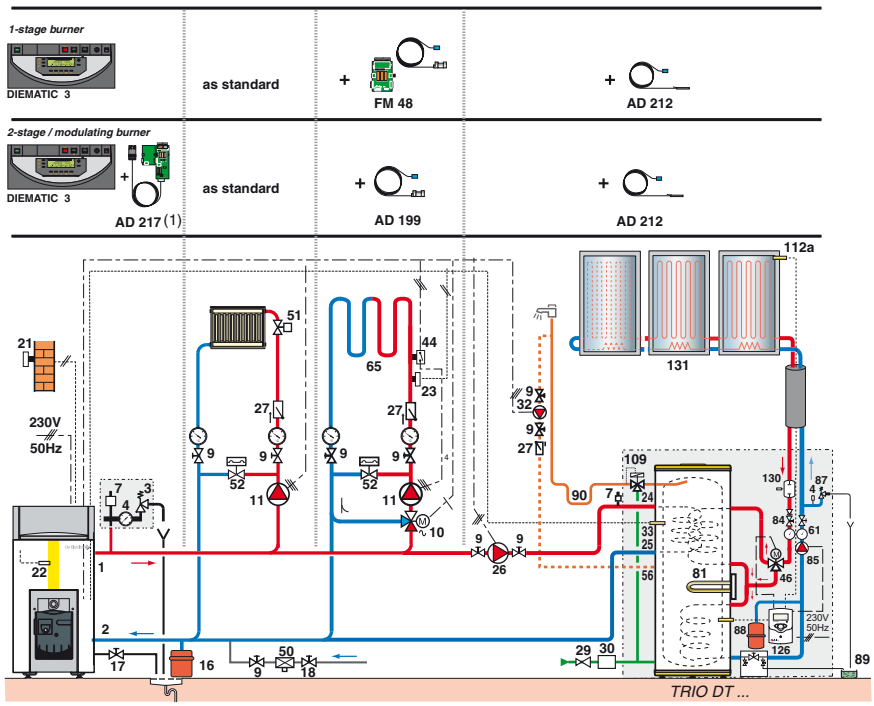

Key: see page 12

EXAMPLE OF INSTALLATION

Installation of 2 x GT 220 boilers connected in cascade, with 4 circuits with mixing valve and 1 DHW circuit, downstream of a disconnecting cylinder

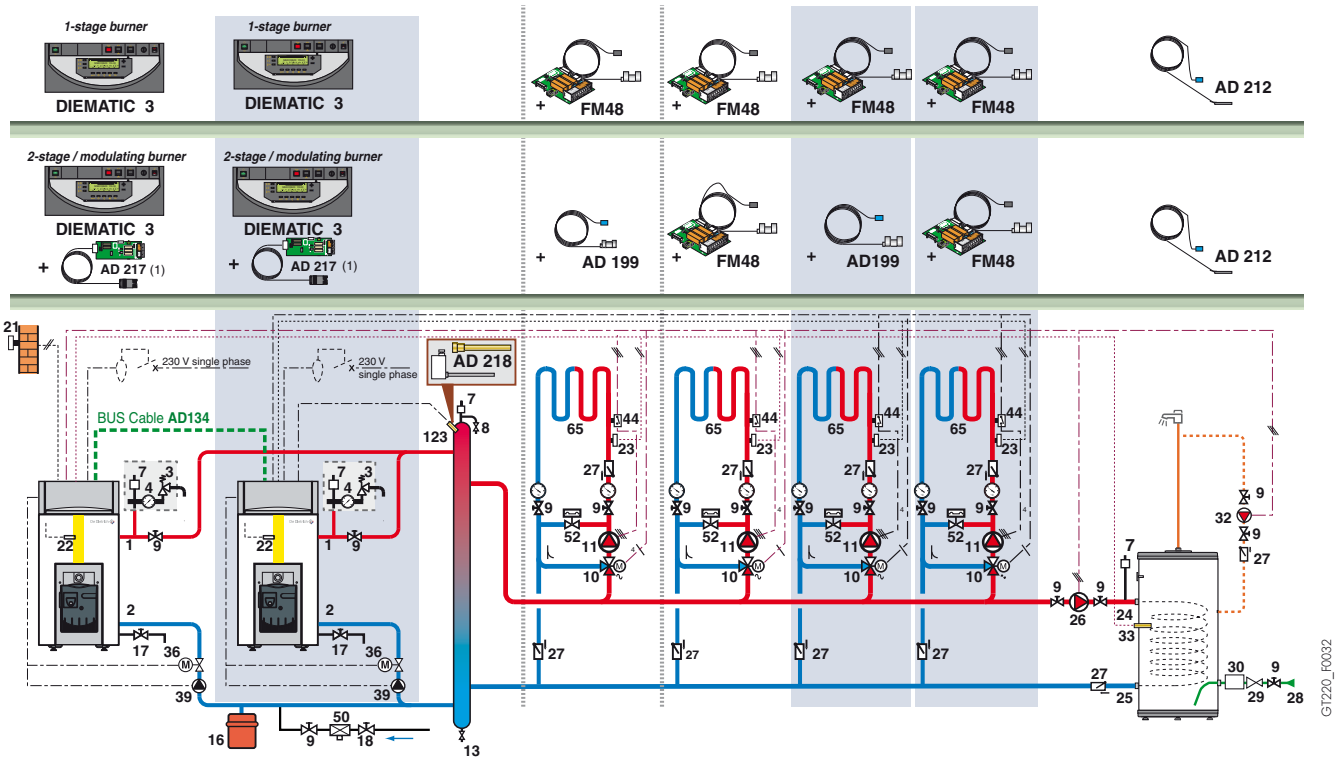

Slave boiler

Key

1 Heating flow
2 Heating return
3 3-bar safety valve
4 Manometer
7 Automatic air vent
8 Manual air vent
9 Valve
10 3-way mixing valve
11 Heating pump
16 Expansion tank
17 Drainage valve
18 Filling the heating circuit
21 Outside temperature sensor
22 Control unit boiler sensor
23 Outlet temp. sensor downstream of the mixing valve
24 Primary input on the DHW calorifier exchanger
25 Primary output on the DHW calorifier exchanger
26 DHW load pump
27 Non-return valve
28 Domestic cold water inlet
29 Pressure reducer
30 Sealed safety device
32 DHW loop pump (optional)
33 DHW temperature sensor
36 Motorised gate valve
39 Injection pump
44 Thermostat limiting the temperature to 65°C with manual reset for underfloor heating
46 3-way 2-position directional valve
50 Disconnector
51 Thermostatic valve
52 Differential valve (only with module fitted with a 3-speed pump)
56 DHW circulation loop return
61 Thermometer
65 Low temperature circuit (radiator or underfloor heating)
75 Domestic water pump
81 Electrical resistance
84 Stop cock with unlockable non-return valve
85 Primary solar circuit pump (for connection to SOL PLUS solar regulation)
87 Safety valve calibrated to 6 bars
88 Solar circuit expansion tank
89 Container for solar fluid
90 Antithermosiphon lyre (= 10 x Ø pipe)
109 Thermostatic mixer tap
112a Solar collector sensor
123 Cascade outlet sensor
126 Solar control unit
130 Manual air vent (Airstop)
131 Collector field

⚠ no outside sensor with B and B2 control panels

(1) PCB delivered as standard with GT 226 D to 228 D boilers + AD217, available as optional equipment for other models of boiler

DE DIETRICH THERMIQUE
S.A.S. with corporate capital of 22 487 610 €
57, rue de la Gare - F-67580 MERTZWILLER
Tel. +33 3 88 80 27 00 - Fax +33 3 88 80 27 99
www.dedietrich-heating.com

De Dietrich
SUSTAINABLE COMFORT®

PEFC 10-31-1436 10/2016 – 300011127B – 347.555.559 Strasbourg Companies Register – Document not contractually binding - Printed in France - OTT Imprimeurs 67310 Wasselonne - 162505